Power Regulators

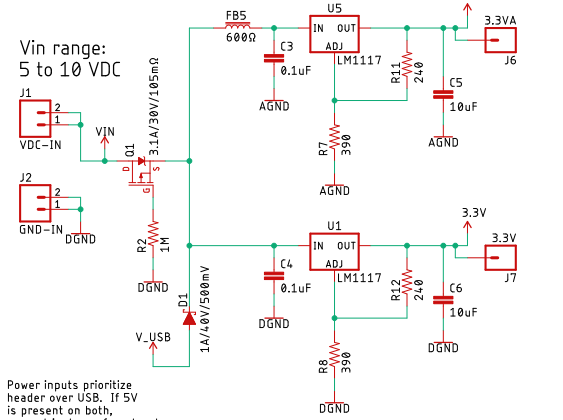

Power inputs prioritize header over USB. If 5V is present on both, current is drawn from header.

USB Device Port

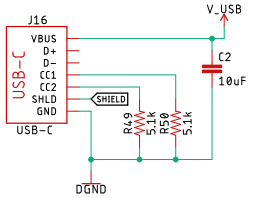

Scope Trigger

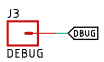

Reset Switch

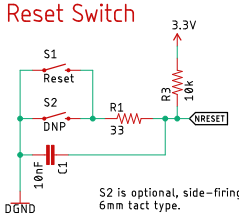

S2 is optional, side-firing 6mm tact type.

User Switch

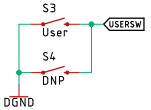

S4 is optional, side-firing 6mm tact type.

Cortex Debug Port

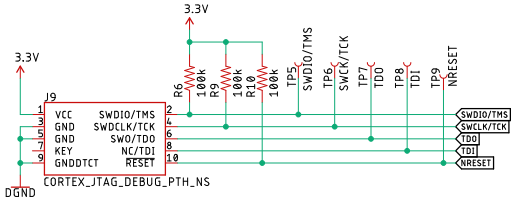

Cortex M7 Processor

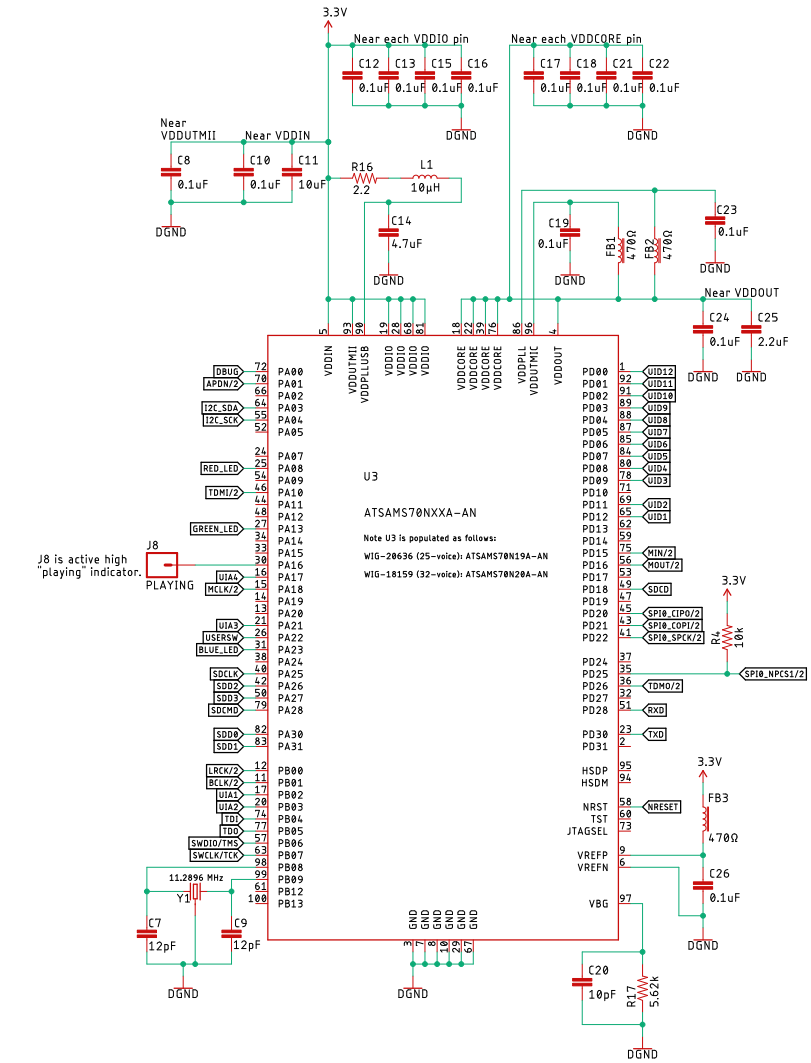

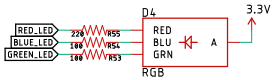

Status LED
Blue On while files are playing.

Qwiic Connector and Pullups

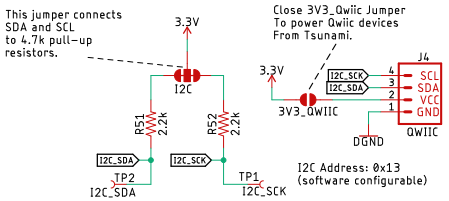

Host Serial Port Connection

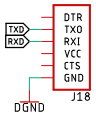

SDIO uSD Card Slot

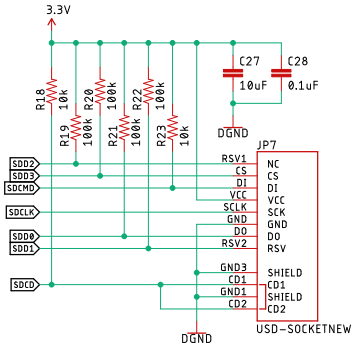

User Trigger Inputs

UIA1 through UIA4 Serve double-pourpse as Triggers 13 to 16, or analog inputs 1 to 4.

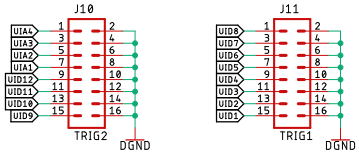

Released under the Creative Commons Attribution Share-Alike 4.0 License
https://creativecommons.org/licenses/by-sa/4.0/

TITLE: SparkFun_Tsunami_Qwiic

Design by: Jamie Robertson, Byron Jacquot
Revision by: Jamie Robertson, Pete Lewis

REV: V21

Date: 10/31/2022 10:52 AM

Sheet: 1/2