EM05 Hardware Design

LTE Standard Module Series

Rev. EM05_Hardware_Design_V1.2

Date: 2020-01-07

Status: Released

Our aim is to provide customers with timely and comprehensive service. For any assistance, please contact our company headquarters:

Quectel Wireless Solutions Co., Ltd.
Building 5, Shanghai Business Park Phase III (Area B), No.1016 Tianlin Road, Minhang District, Shanghai, China 200233
Tel: +86 21 5108 6236
Email: info@quectel.com

Or our local office. For more information, please visit:
http://www.quectel.com/support/sales.htm

For technical support, or to report documentation errors, please visit:
http://www.quectel.com/support/technical.htm
Or email to: support@quectel.com

GENERAL NOTES

QUECTEL OFFERS THE INFORMATION AS A SERVICE TO ITS CUSTOMERS. THE INFORMATION PROVIDED IS BASED UPON CUSTOMERS' REQUIREMENTS. QUECTEL MAKES EVERY EFFORT TO ENSURE THE QUALITY OF THE INFORMATION IT MAKES AVAILABLE. QUECTEL DOES NOT MAKE ANY WARRANTY AS TO THE INFORMATION CONTAINED HEREIN, AND DOES NOT ACCEPT ANY LIABILITY FOR ANY INJURY, LOSS OR DAMAGE OF ANY KIND INCURRED BY USE OF OR RELIANCE UPON THE INFORMATION. ALL INFORMATION SUPPLIED HEREIN IS SUBJECT TO CHANGE WITHOUT PRIOR NOTICE.

COPYRIGHT

THE INFORMATION CONTAINED HERE IS PROPRIETARY TECHNICAL INFORMATION OF QUECTEL WIRELESS SOLUTIONS CO., LTD. TRANSMITTING, REPRODUCTION, DISSEMINATION AND EDITING OF THIS DOCUMENT AS WELL AS UTILIZATION OF THE CONTENT ARE FORBIDDEN WITHOUT PERMISSION. OFFENDERS WILL BE HELD LIABLE FOR PAYMENT OF DAMAGES. ALL RIGHTS ARE RESERVED IN THE EVENT OF A PATENT GRANT OR REGISTRATION OF A UTILITY MODEL OR DESIGN.

Copyright © Quectel Wireless Solutions Co., Ltd. 2020. All rights reserved.

About the Document

History

Revision	Date	Author	Description
1.0	2017-09-22	Yeoman CHEN/ Daryl DU	Initial
1.1	2019-07-22	Frank WANG/ Lorry XU	1. Removed "*" of EM05-E. 2. Removed content related to emergency call. 3. Added B41 to LTE-TDD bands of EM05-E (Table 1). 4. Updated key features of EM05 (Table 2). 5. Updated the functional diagram (Figure 1). 6. Updated the reference circuit of power supply (Figure 6) and relative description of TVS (Chapter 3.5.1). 7. Updated DC characteristics of FUL_CARD_POWER_OFF# (Table 7). 8. Updated reference circuits of normally short-circuited (U)SIM card connector (Figure 16) and a 6-pin (U)SIM card connector (Figure 18), and relative description of (U)SIM circuit design (Chapter 3.8). 9. Updated reference circuit of USB interface (Figure 19) and relative description of USB interface design (Chapter 3.9). 10. Updated auxiliary mode timing (Figure 21) and relative description of PCM interface (Chapter 3.10). 11. Updated relative description of antenna connection of the module (Chapter 5). 12. Updated module operating frequencies in (Table 19). 13. Updated GNSS frequency (Table 20).

			14. Updated antenna requirements (Table 21). 15. Added storage temperature range (Table 26). 16. Added EM05-E current consumption (Table 29). 17. Updated EM05-CE conducted RF output power (Table 30). 18. Added EM05-CML conducted RF output power (Table 31). 19. Added EM05-E conducted RF output power (Table 32). 20. Added EM05-E conducted RF receiving sensitivity (Table 35).
1.2	2020-01-07	Lorry XU/ Frank WANG	1. Updated the description of (U)SIM interface (Chapter 3.8). 2. Updated antenna requirements (Table 21). 3. Updated the description of antenna connectors and mating plugs (Chapter 5.3.2). 4. Updated EM05-E current consumption (Table 29).

Contents

Table Index

Figure Index

1 Introduction

This document defines EM05 module and describes its air interface and hardware interfaces which are connected with customers' applications.

This document can help customers to quickly understand the interface specifications, electrical and mechanical details, as well as other related information of EM05 module. To facilitate its application in different fields, reference design is also provided for customers' reference. Associated with application note and user guide, customers can use the module to design and set up mobile applications easily.

1.1. Safety Information

The following safety precautions must be observed during all phases of operation, such as usage, service or repair of any cellular terminal or mobile incorporating EM05 module. Manufacturers of the cellular terminal should send the following safety information to users and operating personnel, and incorporate these guidelines into all manuals supplied with the product. If not so, Quectel assumes no liability for customers' failure to comply with these precautions.

	Full attention must be given to driving at all times in order to reduce the risk of an accident. Using a mobile while driving (even with a handsfree kit) causes distraction and can lead to an accident. Please comply with laws and regulations restricting the use of wireless devices while driving.
	Switch off the cellular terminal or mobile before boarding an aircraft. The operation of wireless appliances in an aircraft is forbidden to prevent interference with communication systems. If the device offers an Airplane Mode, then it should be enabled prior to boarding an aircraft. Please consult the airline staff for more restrictions on the use of wireless devices on boarding the aircraft.
	Wireless devices may cause interference on sensitive medical equipment, so please be aware of the restrictions on the use of wireless devices when in hospitals, clinics or other healthcare facilities.
	The cellular terminal or mobile contains a transmitter and receiver. When it is ON, it receives and transmits radio frequency signals. RF interference can occur if it is used close to TV set, radio, computer or other electric equipment.
	In locations with potentially explosive atmospheres, obey all posted signs to turn off wireless devices such as your phone or other cellular terminals. Areas with potentially explosive atmospheres include fuelling areas, below decks on boats, fuel or chemical transfer or storage facilities, areas where the air contains chemicals or particles such as grain, dust or metal powders, etc.

2 Product Concept

2.1. General Description

EM05 is a series of LTE/UMTS/HSPA+ wireless communication module with receive diversity. It provides data connectivity on LTE-FDD, LTE-TDD, DC-HSDPA, HSPA+, HSDPA, HSUPA, WCDMA and CDMA networks. It also provides optional GNSS functionality to meet customers' specific application demands. EM05 contains three variants: EM05-CE, EM05-CML and EM05-E. Customers can select a dedicated type based on the region or operator. The following table shows the frequency bands of EM05 series module.

Table 1: Frequency Bands of EM05 Series Module

Modules	LTE Bands	WCDMA Bands	CDMA Band	Rx-diversity	GNSS (Optional)
EM05-CE	FDD: B1/B3/B5/B8 TDD: B38/B39/B40/B41	B1/B8	BC0	Supported	GPS, GLONASS, BeiDou (Compass), Galileo, QZSS
EM05-CML	TDD: B38/B39/B40/B41	/	/	Supported	
EM05-E	FDD:B1/B3/B7/B8/B20/B28 TDD: B38/B41	B1/B8	/	Supported	

EM05 can be applied in the following fields:

- Rugged tablet PC and laptop computer
- Remote monitor system
- Handheld mobile device
- Wireless POS system
- Smart metering system
- Other wireless terminal devices

2.2. Key Features

The following table describes the detailed features of EM05.

Table 2: Key Features of EM05

Feature	Details
Function Interface	PCI Express M.2 Standard Interface
Power Supply	Supply voltage: 3.135V~4.4V Typical supply voltage: 3.3V
Transmitting Power	● Class 3 (24dBm+1/-3dB) for WCDMA bands ● Class 3 (23dBm±2dB) for LTE-FDD bands ● Class 3 (23dBm±2dB) for LTE-TDD bands ● Class 3 (24dBm+2/-1dB) for CDMA BC0
LTE Features	Support up to non-CA Cat 4 Support 1.4/3/5/10/15/20MHz RF bandwidth Support MIMO in DL direction FDD: Max 150Mbps (DL), Max 50Mbps (UL) TDD: Max 130Mbps (DL), Max 30Mbps (UL)
UMTS Features	Support 3GPP R8 DC-HSDPA, HSPA+, HSDPA, HSUPA and WCDMA Support QPSK, 16-QAM and 64-QAM modulation DC-HSDPA: Max 42Mbps (DL) HSUPA: Max 5.76Mbps (UL) WCDMA: Max 384Kbps (DL), Max 384Kbps (UL)
CDMA2000 Features	Support 3GPP2 CDMA2000 1X Advanced, CDMA2000 1x EV-DO Rev.A EVDO: Max 3.1Mbps (DL), Max 1.8Mbps (UL) 1X Advanced: Max 307.2Kbps (DL), Max 307.2Kbps (UL)
Internet Protocol Features	Support Internet service protocols: TCP/UDP/PPP/FTP/HTTP/NTP/PING/QMI/NITZ/HTTPS/SMTP/MMS/FTPS/SMTPS/SSL/FILE/MQTT Support PAP (Password Authentication Protocol) and CHAP (Challenge Handshake Authentication Protocol) protocols which are usually used for PPP connection
SMS	Text and PDU mode Point-to-point MO and MT SMS cell broadcast SMS storage: ME by default
(U)SIM Interface	Support (U)SIM card: 1.8V, 3.0V
Audio Interface	Support one digital audio interface: PCM interface WCDMA: AMR/AMR-WB LTE: AMR/AMR-WB

	Support echo cancellation and noise suppression
PCM Interface	Support 16-bit linear data formats Support long frame synchronization and short frame synchronization Support master and slave mode, but must be the master in long frame synchronization
USB Interface	Compliant with USB 2.0 specification (slave only), the data transfer rate can reach up to 480Mbps Used for AT command communication, data transmission, firmware upgrade, software debugging and GNSS NMEA output Support USB drivers for Windows 7/8/8.1/10, Linux 2.6~6.4, Android 4.x/5.x/6.x/7.x/9.x
Antenna Interface	Main antenna, Rx-diversity antenna and GNSS antenna interfaces
Rx-diversity	Support LTE/WCDMA Rx-diversity
GNSS Features	Gen 8C Lite of Qualcomm Protocol: NMEA 0183
AT Commands	Compliant with 3GPP TS 27.007, 27.005 and Quectel enhanced AT commands
Physical Characteristics	Size: (42±0.15)mm × (30±0.15)mm × (2.3+0.1/-0.2)mm Weight: approx. 6.0g
Temperature Range	Operation temperature range: -30°C to +70°C [1)] Extended temperature range: -40°C to +85°C [2)] Storage temperature range: -40°C to +90°C
Firmware Upgrade	USB interface and DFOTA
RoHS	All hardware components are fully compliant with EU RoHS directive

NOTES

1. [1)] Within operating temperature range, the module is 3GPP compliant.
2. [2)] Within extended temperature range, the module remains the ability to establish and maintain a voice, SMS, data transmission, etc. There is no unrecoverable malfunction. There are also no effects on radio spectrum and no harm to radio network. Only one or more parameters like P_{out} might reduce in their value and exceed the specified tolerances. When the temperature returns to normal operating temperature levels, the module will meet 3GPP specifications again.

2.3. Functional Diagram

The following figure shows a block diagram of EM05.

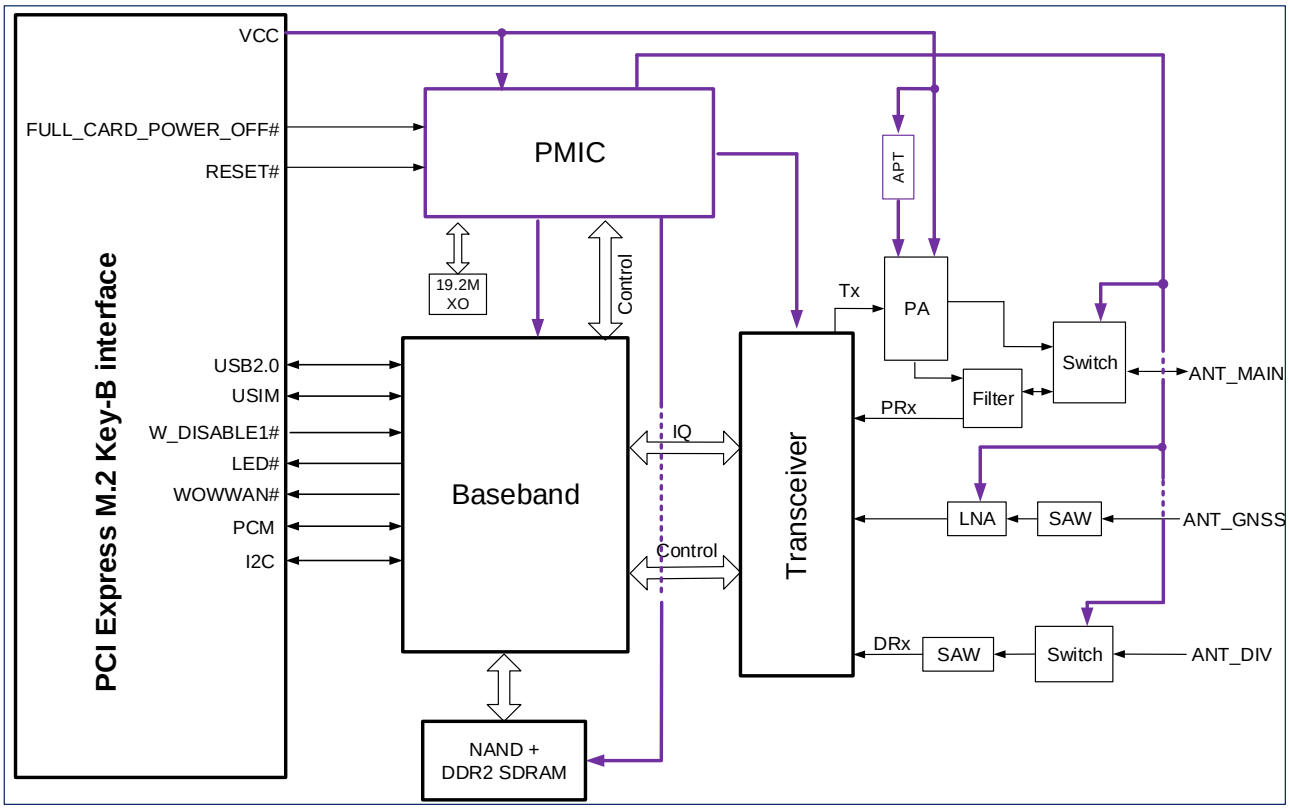

Figure 1: Functional Diagram

3 Application Interfaces

The physical connections and signal levels of EM05 comply with PCI Express M.2 specifications. This chapter mainly describes the definition and application of the following interfaces of EM05:

- Power supply
- (U)SIM interface
- USB interface
- PCM and I2C interfaces
- Control and indication signals
- Configuration pins

3.1. Pin Assignment

The following figure shows the pin assignment of EM05.

No.	Pin Name
74	VCC
72	VCC
70	VCC
68	NC
66	USIM_DET
64	RESERVED
62	RESERVED
60	NC
58	NC
56	NC
54	NC
52	NC
50	NC
48	TX_BLANKING
46	RESERVED
44	GNSS_IRQ
42	I2C_SDA
40	I2C_SCL
38	NC
36	USIM_VDD
34	USIM_DATA
32	USIM_CLK
30	USIM_RESET
28	PCM_SYNC
26	W_DISABLE2#
24	PCM_OUT
22	PCM_IN
20	PCM_CLK
	Notch
	Notch
	Notch
	Notch
10	LED#
8	W_DISABLE1#
6	FUL_CARD_POWER_OFF#
4	VCC
2	VCC

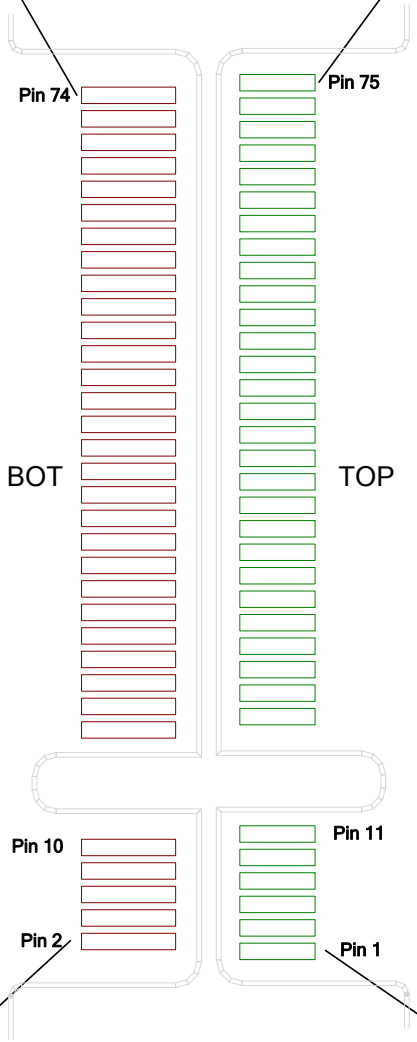

Pin Name	No.
CONFIG_2	75
GND	73
GND	71
CONFIG_1	69
RESET#	67
RESERVED	65
RESERVED	63
RESERVED	61
RESERVED	59
GND	57
NC	55
NC	53
GND	51
NC	49
NC	47
GND	45
NC	43
NC	41
GND	39
NC	37
NC	35
GND	33
NC	31
NC	29
GND	27
DPR	25
WOWWAN#	23
CONFIG_0	21
Notch	
Notch	
Notch	
Notch	
GND	11
USB_DM	9
USB_DP	7
GND	5
GND	3
CONFIG_3	1

Figure 2: Pin Assignment

3.2. Pin Description

The following tables show the pin definition and description of EM05 on the 75-pin application.

Table 3: Definition of I/O Parameters

Type	Description
DI	Digital Input
DO	Digital Output
IO	Bidirectional
OD	Open Drain
PI	Power Input
PO	Power Output

Table 4: Pin Description

Pin No.	M.2 Socket 2 SSIC Pinout	EM05 Pin Name	I/O	Description	Comment
1	CONFIG_3	CONFIG_3		Connected to GND internally. EM05 is configured as WWAN-SSIC 0.	
2	3.3V	VCC	PI	Power supply	3.135V~4.4V
3	GND	GND		Ground	
4	3.3V	VCC	PI	Power supply	3.135V~4.4V
5	GND	GND		Ground	
6	FUL_CARD_ POWER_OFF#	FUL_CARD_ POWER_OFF#	DI	A signal control to power on/off the module. The module is powered off when it is at low level, while powered on when it is at high level. It is pulled to low level internally. It is 3.3V tolerant and can be driven by either 1.8V or 3.3V GPIO.	1.8V/3.3V power domain

7	USB_D+	USB_DP	IO	USB differential data bus (+)	
8	W_DISABLE1#	W_DISABLE1#	DI	Airplane mode control. Active low.	1.8/3.3V power domain
9	USB_D-	USB_DM	IO	USB differential data bus (-)	
10	GPIO_9	LED#	OD	An open drain and active low signal to indicate the RF status of the module. It requires a pull-up resistor on the host.	If unused, keep it open.
11	GND	GND		Ground	
12	Key	Notch		Notch	
13	Key	Notch		Notch	
14	Key	Notch		Notch	
15	Key	Notch		Notch	
16	Key	Notch		Notch	
17	Key	Notch		Notch	
18	Key	Notch		Notch	
19	Key	Notch		Notch	
20	GPIO_5 (AUDIO_0)	PCM_CLK	IO	PCM clock. In master mode, it is an output signal. In slave mode, it is an input signal.	1.8V power domain. If unused, keep it open.
21	CONFIG_0	CONFIG_0		Unconnected internally. EM05 is configured as WWAN-SSIC 0.	
22	GPIO_6 (AUDIO_1)	PCM_IN	DI	PCM data input	1.8V power domain
23	GPIO_11 (WAKE_ON_ WWAN#)	WOWWAN#	OD	An open drain and active low signal to wake up the host. It requires a pull-up resistor on the host.	If unused, keep it open.
24	GPIO_7 (AUDIO_2)	PCM_OUT	DO	PCM data output	1.8V power domain
25	DPR	DPR	DI	Body specific absorption rate (SAR) detection	1.8V power domain

26	GPIO_10 W_DISABLE2#	W_DISABLE2#	DI	GNSS disablement. Active low.	1.8V power domain
27	GND	GND		Ground	
28	GPIO_8- AUDIO_3	PCM_SYNC	IO	PCM data frame synchronization signal	1.8V power domain
29	SSIC-TxN	NC		NC	
30	UIM-RESET	USIM_RESET	DO	Reset signal of (U)SIM card	1.8V/3.0V power domain
31	SSIC-TxP	NC		NC	
32	UIM-CLK	USIM_CLK	DO	Clock signal of (U)SIM card	1.8V/3.0V power domain
33	GND	GND		Ground	
34	UIM-DATA	USIM_DATA	IO	Data signal of (U)SIM card	1.8V/3.0V power domain
35	SSIC-RxN	NC		NC	
36	UIM-PWR	USIM_VDD	PO	Power supply for (U)SIM card	1.8V/3.0V power domain
37	SSIC-RxP	NC		NC	
38	N/C	NC		NC	
39	GND	GND		Ground	
40	GPIO_0 (GNSS_SCL)	I2C_SCL	DO	I2C serial clock. Used for external codec.	Pulled up to 1.8V internally
41	N/C	NC		NC	
42	GPIO_1 (GNSS_SDA)	I2C_SDA	IO	I2C serial data. Used for external codec.	Pulled up to 1.8V internally
43	N/C	NC		NC	
44	GPIO_2 (GNSS_IRQ)	GNSS_IRQ	DI	GNSS interrupt request	1.8V power domain
45	GND	GND		Ground	
46	GPIO_3 (SYSCLK)	RESERVED		Reserved	
47	N/C	NC		NC	
48	GPIO_4 (TX_BLANKING)	TX_BLANKING	DO	Transmit blanking signal for external GNSS module	1.8V power domain

49	N/C	NC		NC	
50	N/C	NC		NC	
51	GND	GND		Ground	
52	N/C	NC		NC	
53	N/C	NC		NC	
54	N/C	NC		NC	
55	N/C	NC		NC	
56	N/C	NC		NC	
57	GND	GND		Ground	
58	N/C	NC		NC	
59	ANTCTL0	RESERVED		Reserved	
60	COEX3	NC		NC	
61	ANTCTL1	RESERVED		Reserved	
62	COEX2	RESERVED		Reserved	
63	ANTCTL2	RESERVED		Reserved	
64	COEX1	RESERVED		Reserved	
65	ANTCTL3	RESERVED		Reserved	
66	SIM_DETECT	USIM_DET	DI	(U)SIM card insertion detection	1.8V power domain
67	RESET#	RESET#	DI	Reset the module. Active low.	1.8V power domain
68	SUSCLK (32kHz)	NC		NC	
69	CONFIG_1	CONFIG_1		Connected to GND internally. EM05 is configured as WWAN-SSIC 0.	
70	3.3V	VCC	PI	Power supply	3.135V~4.4V
71	GND	GND		Ground	
72	3.3V	VCC	PI	Power supply	3.135V~4.4V

73	GND	GND		Ground	
74	3.3V	VCC	PI	Power supply	3.135V~4.4V
75	CONFIG_2	CONFIG_2		Connected to GND internally. EM05 is configured as WWAN-SSIC 0.	

NOTES

1. The typical supply voltage of VCC is 3.3V.
2. EM05-CML does not support I2C interface.
3. Please keep all NC, reserved and unused pins open.

3.3. Operating Modes

The table below briefly summarizes the various operating modes referred in the following chapters.

Table 5: Overview of Operating Modes

Mode	Details	
Normal Operation	Idle	Software is active. The module has registered to the network, and it is ready to send and receive data.
	Talk/Data	Network connection is ongoing. In this mode, the power consumption is decided by network setting and data transfer rate.
Minimum Functionality Mode	**AT+CFUN** command can set the module to a minimum functionality mode without removing the power supply. In this case, both RF function and (U)SIM card will be invalid.	
Airplane Mode	**AT+CFUN** command or W_DISABLE1# pin can set the module into airplane mode. In this case, RF function will be invalid.	
Sleep Mode	In this mode, the current consumption of the module will be reduced to the minimal level. During this mode, the module can still receive paging message, SMS, voice call and TCP/UDP data from the network normally.	
Power Down Mode	In this mode, the power management unit shuts down the power supply. Software is not active. Operating voltage (connected to VCC) remains applied.	

3.4. Power Saving

3.4.1. Sleep Mode

EM05 is able to reduce its current consumption to a minimum value during sleep mode. The following section describes the power saving procedure of EM05 module.

3.4.1.1. USB Application with USB Remote Wakeup Function

If the host supports USB Suspend/Resume and remote wake-up function, the following two preconditions must be met to let the module enter sleep mode.

- Execute **AT+QSCLK=1** to enable sleep mode.
- The host's USB bus, which is connected with the module's USB interface, enters Suspend state.

The following figure shows the connection between the module and the host.

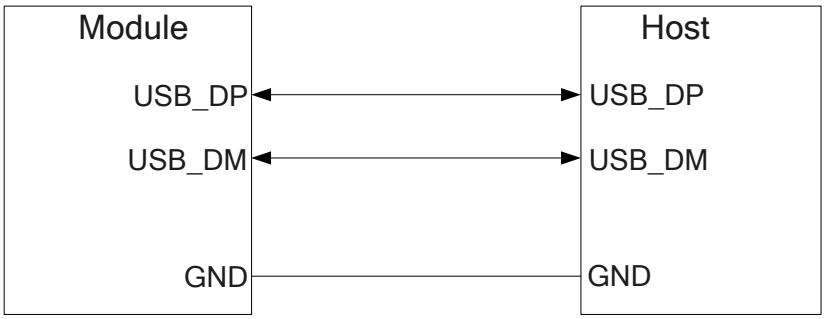

Figure 3: Sleep Mode Application with USB Remote Wakeup

- Sending data to EM05 via USB will wake up the module.
- When EM05 has a URC to report, the module will send remote wake-up signals via USB bus so as to wake up the host.

3.4.1.2. USB Application with USB Suspend/Resume and WOWWAN# Functions

If the host supports USB Suspend/Resume but does not support remote wake-up function, the WOWWAN# signal is needed to wake up the host.

There are two preconditions to let the module enter Sleep mode.

- Execute **AT+QSCLK=1** to enable Sleep mode.
- The host's USB bus, which is connected with the module's USB interface, enters Suspend state.

The following figure shows the connection between the module and the host.

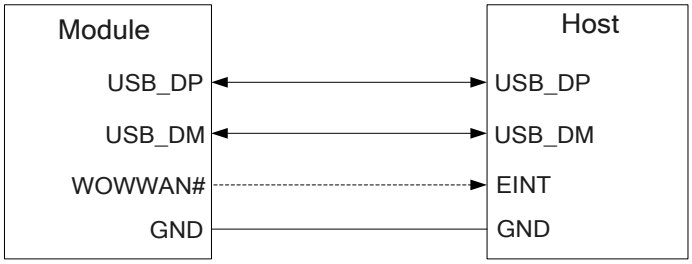

Figure 4: Sleep Mode Application with WOWWAN#

- Sending data to EM05 via USB will wake up the module.
- When EM05 has a URC to report, WOWWAN# signal will wake up the host.

3.4.2. Airplane Mode

When the module enters airplane mode, RF function does not work, and all AT commands correlative with RF function will be inaccessible. This mode can be set via the following ways.

Hardware:

The W_DISABLE1# pin is pulled up by default; driving it to low level will let the module enter airplane mode.

Software:

AT+CFUN command provides the following choices of the functionality level.

- **AT+CFUN=0:** Minimum functionality mode; both (U)SIM and RF functions are disabled.
- **AT+CFUN=1:** Full functionality mode (by default).
- **AT+CFUN=4:** Airplane mode. RF function is disabled.

For details of related AT commands, please refer to ***document [2]***.

NOTES

1. The W_DISABLE1# control function is disabled in firmware by default. It can be enabled by **AT+QCFG="airplanecontrol"**.
2. Execution of **AT+CFUN** will not affect GNSS function.

3.5. Power Supply

The following table shows pin definition of VCC and GND pins.

Table 6: Definition of VCC and GND Pins

Pin Name	Pin No.	I/O	Power Domain	Description
VCC	2, 4, 70, 72, 74	PI	3.135V~4.4V	3.3V DC supply
GND	3, 5, 11, 27, 33, 39, 45, 51, 57, 71, 73			Ground

3.5.1. Decrease Voltage Drop

The power supply range of the module is from 3.135V to 4.4V. Please make sure that the input voltage will never drop below 3.135V. The following figure shows the voltage drop during burst transmission in 3G and 4G networks.

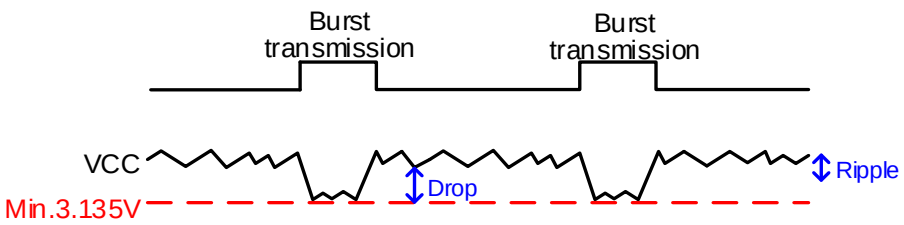

Figure 5: Power Supply Limits During Burst Transmission

To decrease voltage drop, a bypass capacitor of about 220μF with low ESR (ESR=0.7Ω) should be used, and a multi-layer ceramic chip capacitor (MLCC) array should also be reserved due to its ultra-low ESR. It is recommended to use three ceramic capacitors (100nF, 33pF, 10pF) for composing the MLCC array, and place these capacitors close to VCC pins. The main power supply from an external application has to be a single voltage source. The width of VCC trace should be no less than 2mm. In principle, the longer the VCC trace is, the wider it will be.

In addition, in order to avoid the damage caused by electric surge and ESD, it is suggested that a TVS diode with suggested low reverse stand-off voltage V_{RWM} 4.7V, low clamping voltage V_C and high reverse peak pulse current I_{PP} should be used. The following figure shows the reference circuit of VCC.

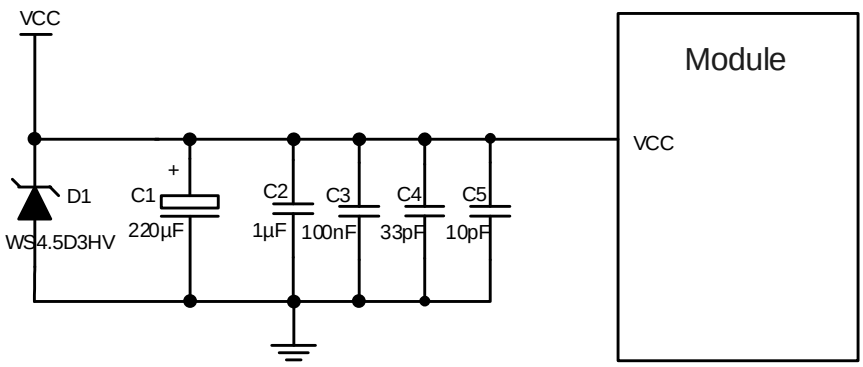

Figure 6: Reference Circuit of Power Supply

3.5.2. Reference Design for Power Supply

Power design for the module is very important, as the performance of the module largely depends on the power source. The power supply should be able to provide sufficient current up to 2.0A at least to the module. If the voltage drop between the input and output is not too high, it is suggested that an LDO should be used to supply power for the module. If there is a big voltage difference between the input source and the desired output (VCC), a buck converter is preferred to be used as the power supply.

The following figure shows a reference design for +5V input power source. The typical output of the power supply is about 3.3V and the maximum load current is 3.0A.

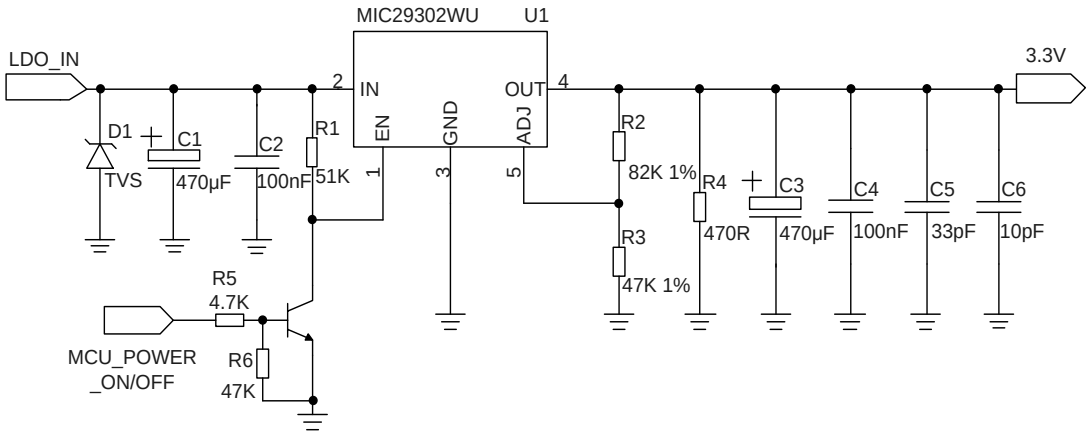

Figure 7: Reference Design of Power Supply

NOTE

In order to avoid damaging internal flash, please do not switch off the power supply when the module works normally. It is suggested that the power supply should be cut off after pulling down RESET# for about 100ms.

3.5.3. Monitor the Power Supply

AT+CBC command can be used to monitor the VCC voltage value. For more details, please refer to ***document [2]***.

3.6. Power on/off Scenarios

3.6.1. Turn on the Module Using FUL_CARD_POWER_OFF#

The following table shows the pin definition of FUL_CARD_POWER_OFF#.

Table 7: Description of FUL_CARD_POWER_OFF# Pin

Pin Name	Pin No.	Description	DC Characteristics	Comment
FUL_CARD_POWER_OFF#	6	A signal control to power on/off the module. The module is powered off when it is at low level, while powered on when it is at high level. It is pulled to low level internally.	V_{IHmin}=1.19V V_{IHmax}=4.4V V_{ILmin}=-0.3V V_{ILmax}=0.2V	Pulled down internally

EM05 can be turned on by driving the FUL_CARD_POWER_OFF# pin to a high level.

It is recommended to use a GPIO from host to control the FUL_CARD_POWER_OFF#. A simple reference circuit is illustrated in the following figure.

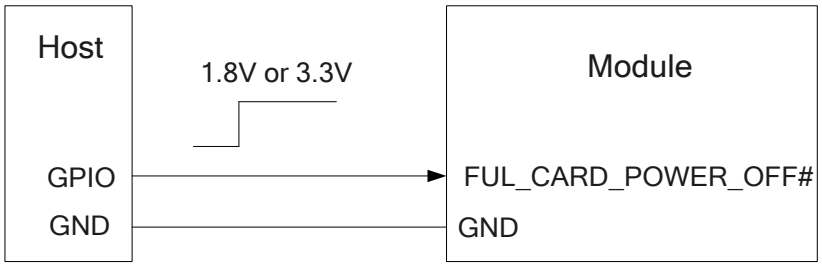

Figure 8: Turn on the Module Using GPIO

The module can also be turned on automatically. The FUL_CARD_POWER_OFF# should be pulled up to 1.8V or 3.3V (recommended) through a resistor, whose resistance should be 5kΩ~10kΩ. In this case, when the power supply of VCC is cut off, the module will be shut down.

A reference circuit is shown in the following figure.

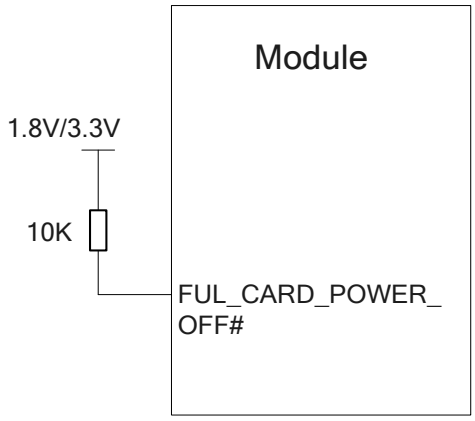

Figure 9: Turn on the Module Automatically

The timing of turning on the module is illustrated in the following figure.

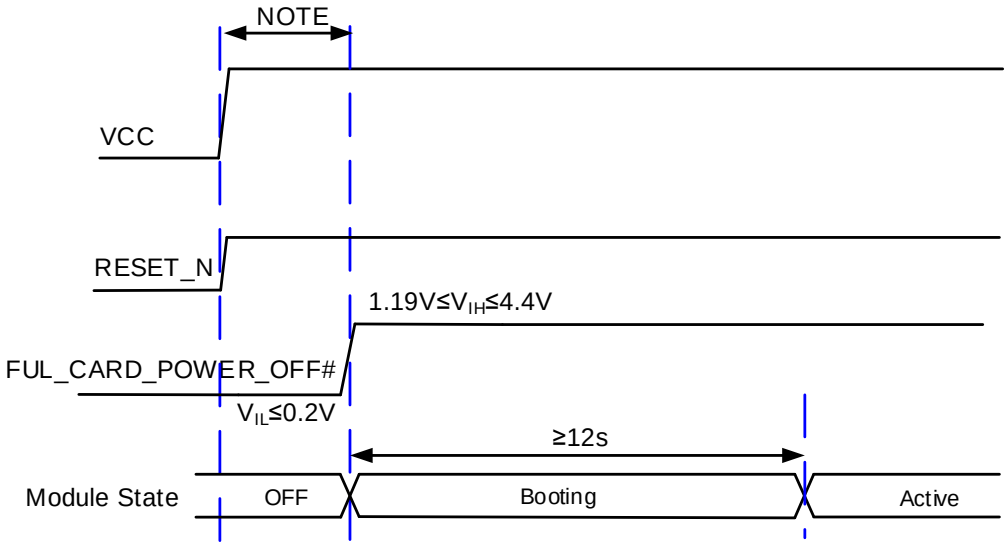

Figure 10: Timing of Turning on Module

NOTE

Please make sure that VCC is stable before pulling up FUL_CARD_POWER_OFF# pin. The time between them is no less than 30ms.

3.6.2. Turn off the Module

The following procedures can be applied to turn off the module:

- Hardware shutdown: Turn off the module using the FUL_CARD_POWER_OFF# pin.
- Software shutdown: Turn off the module using **AT+QPOWD**.

3.6.2.1. Turn off the Module Using the FUL_CARD_POWER_OFF# Pin

Driving the FUL_CARD_POWER_OFF# pin to low, the supply of PMIC will be powered off, then the module will be forced to shut down. But it is recommended to pull down RESET# for about 100ms before driving the FUL_CARD_POWER_OFF# pin to low, so as to avoid damage to the internal flash.

The timing of turning off the module via FUL_CARD_POWER_OFF# is illustrated in the following figure.

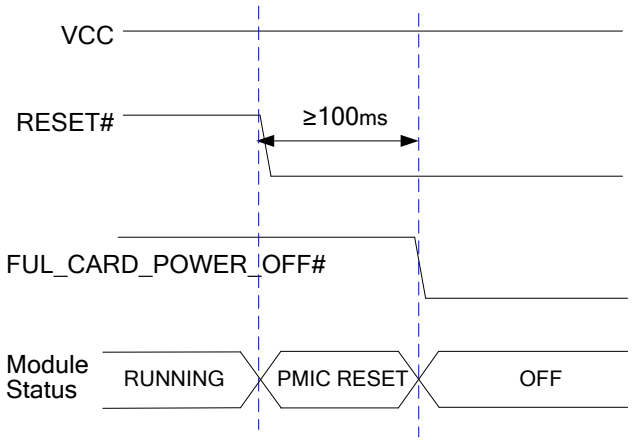

Figure 11: Timing of Turning off the Module Through FUL_CARD_POWER_OFF#

3.6.2.2. Turn off the Module Using AT Command

It is a safe way to use **AT+QPOWD** command to turn off the module. Please pull down FUL_CARD_POWER_OFF# pin, or cut off power supply of VCC after the module is shut down, otherwise the module will be powered on again.

The timing of turning off the module through AT command is illustrated as the following figure.

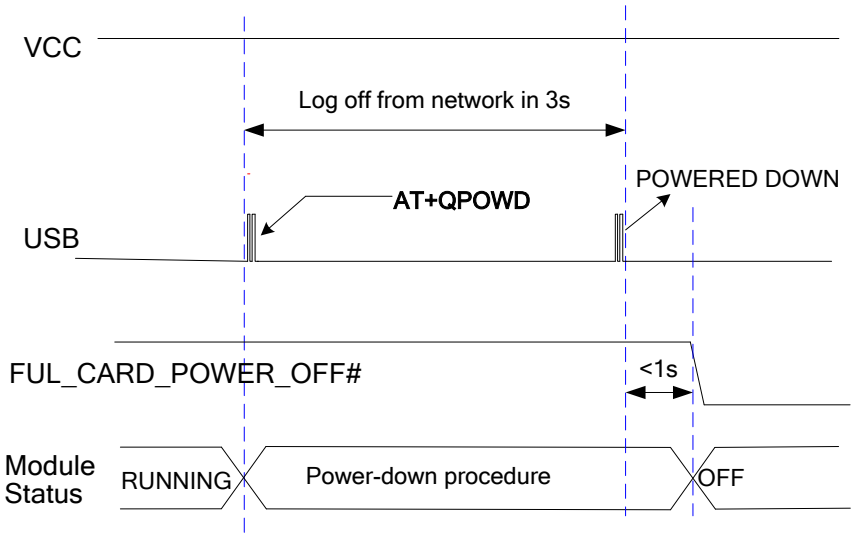

Figure 12: Timing of Turning off the Module Through AT Command

During power-down procedure, the module will log off from network and save important data. After the module logs off, it sends URC "POWERED DOWN" and shuts down the internal power supply. If the "POWERED DOWN" URC is outputted, the power on VCC pins can be cut off.

3.7. Reset the Module

The RESET# pin can be used to reset the module. The module can enter reset state by driving RESET# to a low level voltage for 150ms~460ms.

Table 8: Pin Description of RESET#

Pin Name	Pin No.	Description	DC Characteristics	Comment
RESET#	67	Reset the module	V_{IL}max=0.5V	

An open drain/collector driver or button can be used to control the RESET#.

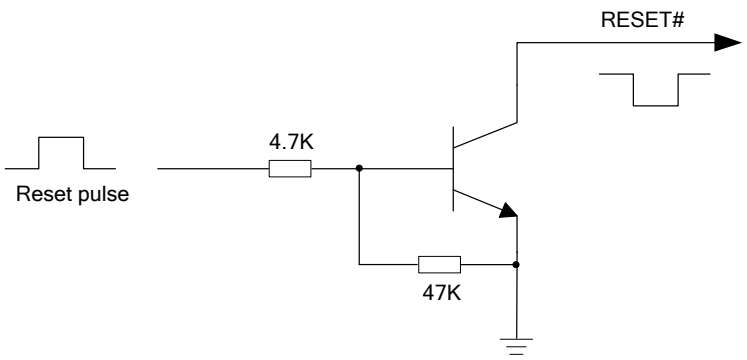

Figure 13: Reference Circuit of RESET# by Using Driving Circuit

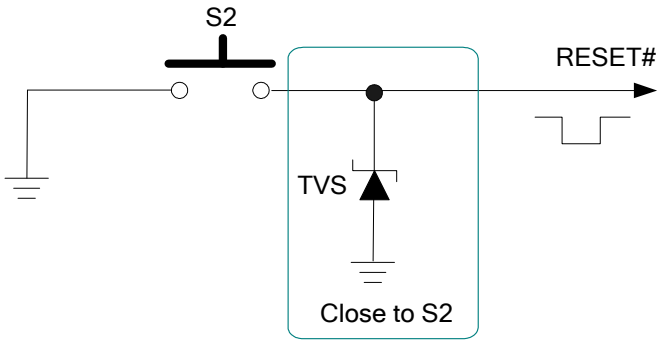

Figure 14: Reference Circuit of RESET# by Using Button

The timing of resetting the module is illustrated in the following figure.

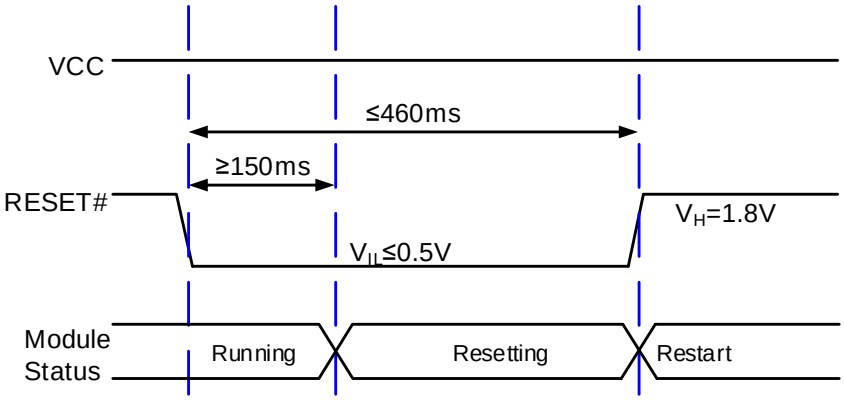

Figure 15: Timing of Resetting Module

NOTE

Please ensure that there is no large capacitance on RESET# pin.

3.8. (U)SIM Interface

The (U)SIM interface circuitry meets ETSI and IMT-2000 requirements. Both 1.8V and 3.0V (U)SIM cards are supported.

Table 9: Pin Definition of (U)SIM Interface

Pin Name	Pin No.	I/O	Description	Comment
USIM_VDD	36	PO	Power supply for (U)SIM card	Either 1.8V or 3.0V is supported by the module automatically.
USIM_DATA	34	IO	Data signal of (U)SIM card	
USIM_CLK	32	DO	Clock signal of (U)SIM card	
USIM_RESET	30	DO	Reset signal of (U)SIM card	
USIM_DET	66	DI	(U)SIM card insertion detection. Active high.	Pulled up to 1.8V internally. When (U)SIM card is present, it is at high level (pulled up to 1.8V). When (U)SIM card is absent, it is at low level.

EM05 supports (U)SIM card hot-plug via the USIM_DET pin, which is a level trigger pin. The USIM_DET is normally short-circuited to ground when (U)SIM card is not inserted. When the (U)SIM card is inserted, USIM_DET will change from low level to high level. The rising edge indicates insertion of the (U)SIM card. When the (U)SIM card is pulled out, USIM_DET will change from high level to low level. This falling edge indicates the absence of the (U)SIM card.

The following figure shows a reference design of (U)SIM interface with normally closed (U)SIM card connector (CD switch closed).

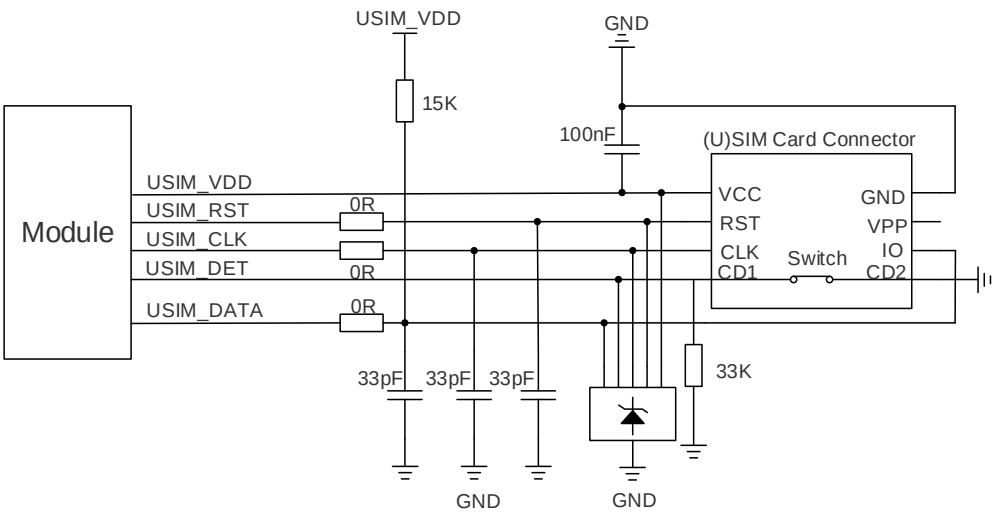

Figure 16: Reference Circuit of (U)SIM Interface with Normally Closed (U)SIM Card Connector

Normally Closed (U)SIM Card Connector

- When the (U)SIM is absent, the switch is closed and USIM_DET is at low level.
- When the (U)SIM is inserted, the switch is open and USIM_DET is at high level.

The following figure shows a reference design of (U)SIM interface with normally open (U)SIM card connector.

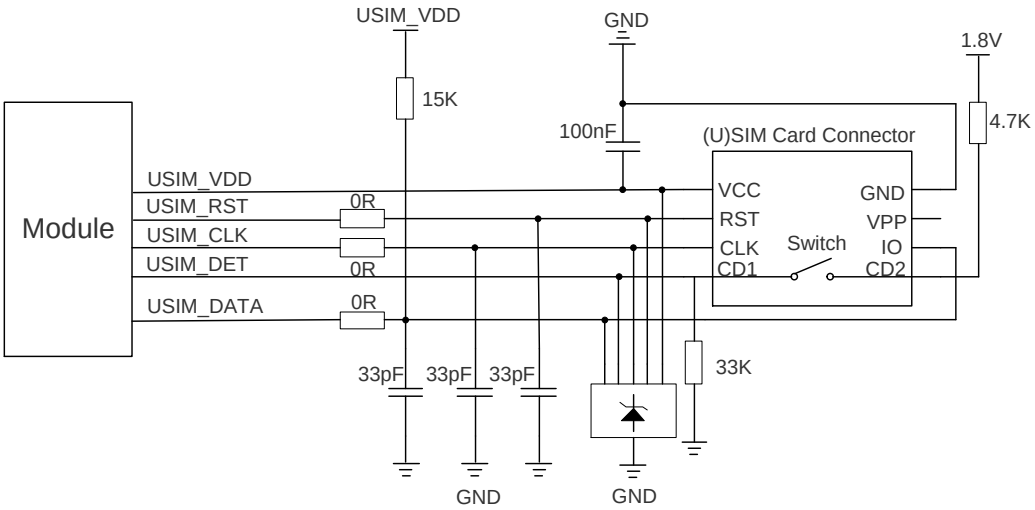

Figure 17: Reference Circuit of (U)SIM Interface with Normally Open (U)SIM Card Connector

Normally Open (U)SIM Card Connector

- When the (U)SIM is absent, the switch is open and USIM_DET is at low level.
- When the (U)SIM is inserted, the switch is closed and USIM_DET is at high level.

If (U)SIM card detection function is not needed, please keep USIM_DET unconnected. A reference circuit for (U)SIM interface with a 6-pin (U)SIM card connector is illustrated in the following figure.

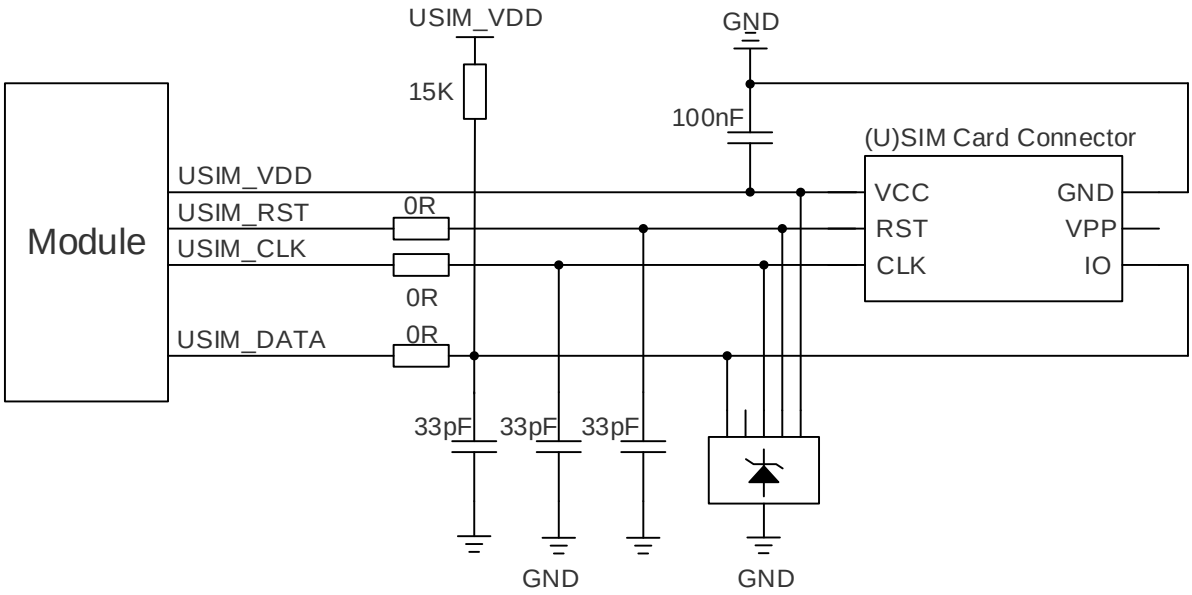

Figure 18: Reference Circuit of (U)SIM Interface with a 6-Pin (U)SIM Card Connector

In order to enhance the reliability and availability of the (U)SIM card in customers' applications, please follow the criteria below in (U)SIM circuit design:

- Keep placement of (U)SIM card connector to the module as close as possible. Keep the trace length less than 200mm as far as possible.
- Keep (U)SIM card signals away from RF and VCC traces.
- Keep the trace width of ground and USIM_VDD no less than 0.5mm to maintain the same electric potential.
- To avoid cross-talk between USIM_DATA and USIM_CLK, keep them away from each other and shield them with surrounded ground.
- In order to offer good ESD protection, it is recommended to add a TVS diode array whose parasitic capacitance should not be more than 10pF. The 0Ω resistors should be added in series between the module and the (U)SIM card so as to suppress EMI spurious transmission and enhance ESD protection. The 33pF capacitors are used for filtering interference of RF. Please note that the (U)SIM peripheral circuit should be close to the (U)SIM card connector.
- The pull-up resistor on USIM_DATA line can improve anti-jamming capability upon applying of long layout trace and sensitive occasion, and should be placed close to the (U)SIM card connector.

3.9. USB Interface

The following table shows the pin definition of USB interface.

Table 10: Pin Definition of USB Interface

Pin Name	Pin No.	I/O	Description	Comment
USB_DP	7	IO	USB differential data bus (+)	Require differential impedance of 90Ω
USB_DM	9	IO	USB differential data bus (-)	Require differential impedance of 90Ω

EM05 is compliant with USB 2.0 specification. It can only be used as a slave device. Meanwhile, it supports high speed (480Mbps) and full speed (12Mbps) mode. The USB interface is used for AT command communication, data transmission, GNSS NMEA output, software debugging and firmware upgrade. The following figure shows the reference circuit of USB interface.

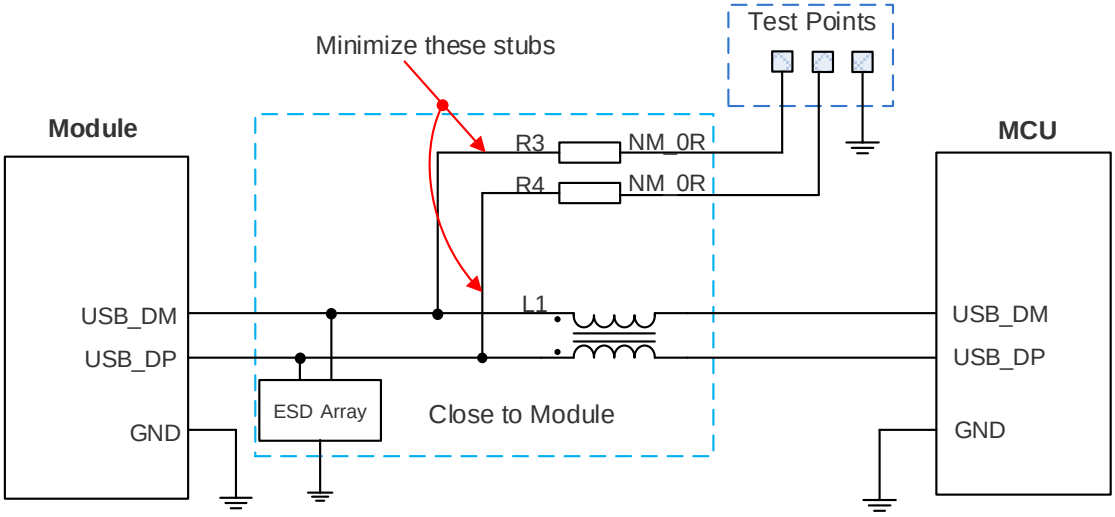

Figure 19: Reference Circuit of USB Interface

A common mode choke L1 is recommended to be added in series between the module and customer's MCU in order to suppress EMI spurious transmission. Meanwhile, the 0Ω resistors (R3 and R4) should be added in series between the module and the test points so as to facilitate debugging, and the resistors are not mounted by default. In order to ensure the integrity of USB data line signal, L1, R3 and R4 components must be placed close to the module, and also these resistors should be placed close to each other. The extra stubs of trace must be as short as possible.

The following principles should be complied with when designing the USB interface, so as to meet USB 2.0 specification.

- It is important to route the USB signal traces as differential pairs with total grounding. The impedance of USB differential trace is 90Ω.
- Do not route signal traces under crystals, oscillators, magnetic devices or RF signal traces. It is important to route the USB differential traces in inner-layer with ground shielding on not only upper and lower layers but also right and left sides.
- Pay attention to the influence of junction capacitance of ESD protection components on USB data lines. Typically, the capacitance value should be less than 2pF.
- Keep the ESD protection components as close to the USB connector as possible.

3.10. PCM and I2C Interfaces

EM05 provides one Pulse Code Modulation (PCM) digital interface for audio design, which supports 16-bit linear data formats and supports the following modes:

- Primary mode (short frame synchronization, works as both master and slave)
- Auxiliary mode (long frame synchronization, works as master only)

In primary mode, the data is sampled on the falling edge of the PCM_CLK and transmitted on the rising edge. The PCM_SYNC falling edge represents the MSB. In this mode, the PCM interface supports 256kHz, 512kHz, 1024kHz or 2048kHz PCM_CLK at 8kHz PCM_SYNC, and also supports 4096kHz PCM_CLK at 16kHz PCM_SYNC. The following figure shows the timing relationship in primary mode with 8kHz PCM_SYNC and 2048kHz PCM_CLK.

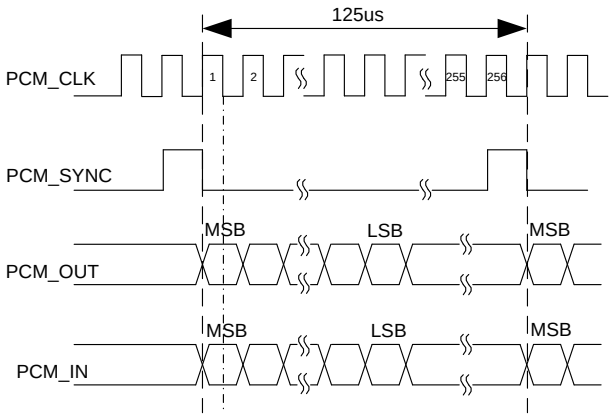

Figure 20: Primary Mode Timing

In auxiliary mode, the data is sampled on the falling edge of the PCM_CLK and transmitted on the rising edge. The PCM_SYNC rising edge represents the MSB. In this mode, the PCM interface operates with a 256kHz, 512kHz, 1024kHz or 2048kHz PCM_CLK and an 8kHz, 50% duty cycle PCM_SYNC. The following figure shows the timing relationship in auxiliary mode with 8kHz PCM_SYNC and 256kHz PCM_CLK.

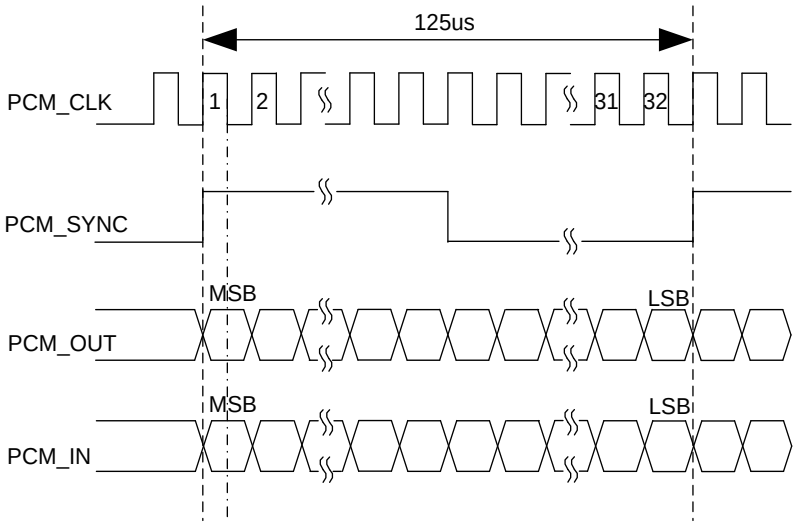

Figure 21: Auxiliary Mode Timing

The following table shows the pin definition of PCM and I2C interfaces which can be applied on audio codec design.

Table 11: Pin Definition of PCM and I2C Interfaces

Pin Name	Pin No.	I/O	Description	Comment
PCM_IN	22	DI	PCM data input	1.8V power domain
PCM_OUT	24	DO	PCM data output	1.8V power domain
PCM_SYNC	28	IO	PCM data frame synchronization signal	1.8V power domain
PCM_CLK	20	IO	PCM data bit clock	1.8V power domain
I2C_SCL	40	DO	I2C serial clock	Pulled up to 1.8V internally
I2C_SDA	42	IO	I2C serial data	Pulled up to 1.8V internally

Clock and mode can be configured by AT command, and the default configuration is master mode using short frame synchronization format with 2048kHz PCM_CLK and 8kHz PCM_SYNC. Please refer to ***document [2]*** about **AT+QDAI** command for details.

The following figure shows a reference design of PCM interface with external codec IC.

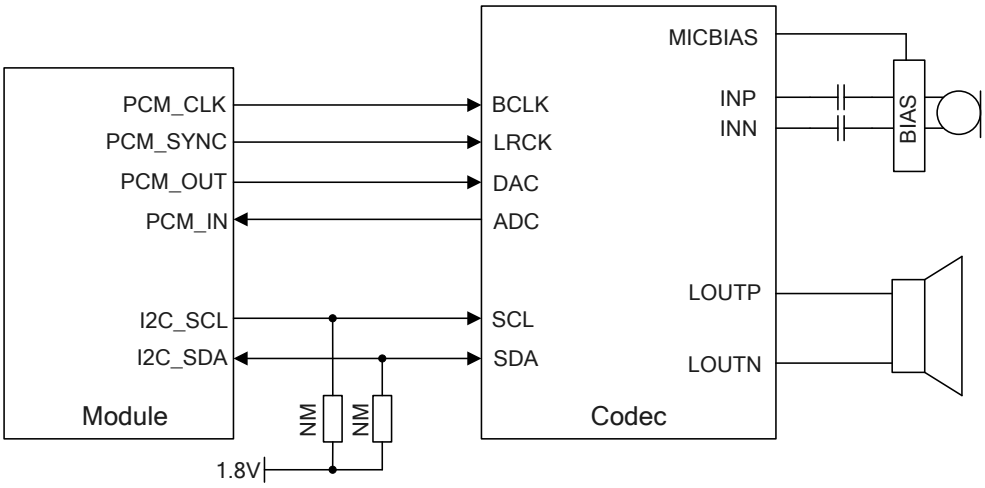

Figure 22: Reference Circuit of PCM Application with Audio Codec

NOTES

1. It is recommended to reserve a RC (R=22Ω, C=22pF) circuit on the PCM lines, especially for PCM_CLK.
2. EM05 works as a master device pertaining to I2C interface.
3. EM05-CML does not support I2C interface.

3.11. Control and Indication Signals

The following table shows the pin definition of control and indication signals.

Table 12: Pin Definition of Control and Indication Signals

Pin Name	Pin No.	I/O	Description	Power Domain
W_DISABLE1#	8	DI	Airplane mode control. Active low.	1.8V/3.3V
LED#	10	OD	An open drain and active low signal to indicate the RF status of the module.	
WOWWAN#	23	OD	An open drain and active low signal to wake up the host.	
W_DISABLE2#	26	DI	GNSS disablement. Active low.	1.8V
DPR	25	DI	Body SAR detection.	1.8V

GNSS_IRQ	44	GNSS interrupt request.	1.8V
TX_BLANKING	48		1.8V

NOTE

Functions including body SAR detection (DPR), transmit blanking signal for external GNSS module (TX_BLANKING), GNSS disable (W_DISABLE2#) and GNSS interrupt request (GNSS_IRQ) are under development.

3.11.1. W_DISABLE1# Signal

EM05 provides a W_DISABLE1# signal to disable or enable RF function through hardware operation. Besides, RF function can also be enabled or disabled through software AT commands. For more details, please refer to ***Chapter 3.4.2***.

Table 13: Function of W_DISABLE1#

W_DISABLE1#	RF Function
High Level	RF function is determined by software AT commands. Default: enabled.
Low Level	Disabled

3.11.2. LED# Signal

The LED# signal of EM05 is used to indicate the RF status of the module, whose current consumption is up to 40mA. According to the following circuit, in order to reduce the current consumption of the LED, a resistor must be placed in series with the LED. The LED# signal is active low; when it is at low level, the LED is emitting light.

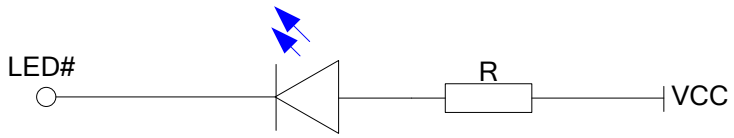

Figure 23: LED# Signal Reference Circuit Diagram

The following table shows the RF status indications of the LED# signal.

Table 14: RF Status Indications of LED# Signal

LED#	Description
Low Level (Light On)	RF function is turned on.
High Impedance (Light Off)	RF function is turned off if any of the following circumstances occurs: ● The (U)SIM card is not powered. ● W_DISABLE1# signal is at low level (RF function is disabled). ● **AT+CFUN=0** ● **AT+CFUN=4**

3.11.3. WOWWAN# Signal

The WOWWAN# signal is an open drain signal, which requires a pull-up resistor on the host. When a URC returns, a 1s low level pulse will be outputted to wake up the host. The state of WOWWAN# signal is shown as below.

Table 15: State of WOWWAN# Signal

WOWWAN#	Operating Status
Output 1s low level (pulse signal)	Call/SMS/Data
Always at high level	Idle/Sleep

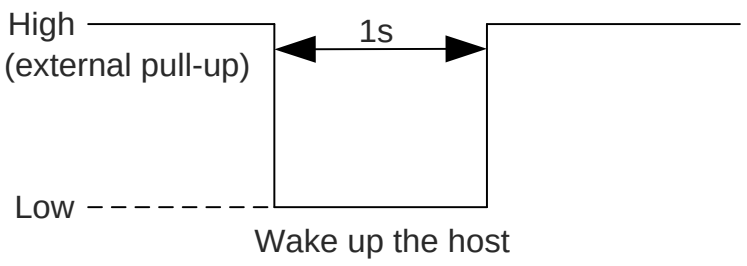

Figure 24: WOWWAN# Behavior

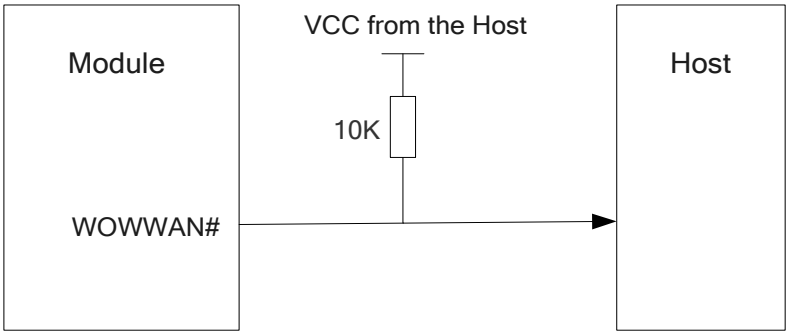

Figure 25: WOWWAN# Signal Reference Circuit Diagram

3.11.4. DPR Signal*

EM05 provides an input pin DPR (Dynamic Power Reduction) for body SAR detection. The signal is sent by a host system proximity sensor to the wireless device to provide an input trigger which will reduce output power in radio transmission.

Table 16: Function of DPR Signal

DPR	Function
High/Floating	Max transmit power will not be backed off.
Low	Max transmit power will be backed off by executing AT commands.

NOTE

"*" means under development.

3.12. Configuration Pins

EM05 provides 4 configuration pins to configure the M.2 interface type, and it is configured as WWAN-SSIC 0 by default.

Table 17: Pin Definition of Configuration Pins

Pin Name	Pin No.	Description
CONFIG_3	1	Connected to GND internally.
CONFIG_0	21	NC
CONFIG_1	69	Connected to GND internally.
CONFIG_2	75	Connected to GND internally.

The 4 configuration pins on EM05 module are defined as below:

Table 18: List of Configuration Pins

Config_0 (Pin 21)	Config_1 (Pin 69)	Config_2 (Pin 75)	Config_3 (Pin 1)	Module Type and Main Host Interface	Port Configuration
NC	GND	GND	GND	WWAN-SSIC	0

4 GNSS Receiver

4.1. General Description

EM05 includes a fully integrated Global Navigation Satellite System (GNSS) solution that supports Gen8C-Lite of Qualcomm (GPS, GLONASS, BeiDou/Compass, Galileo and QZSS).

EM05 supports standard NMEA-0183 protocol, and outputs NMEA sentences at 1Hz data update rate via USB interface by default.

By default, EM05 GNSS engine is switched off. It has to be switched on via AT command. For more details about GNSS engine technology and configurations, please refer to ***document [3]***.

5 Antenna Connection

EM05 is mounted with three 2mm × 2mm antenna connectors for external antenna connection: a main antenna connector, an Rx-diversity antenna connector, and a GNSS antenna connector. The impedance of the antenna connectors is 50Ω.

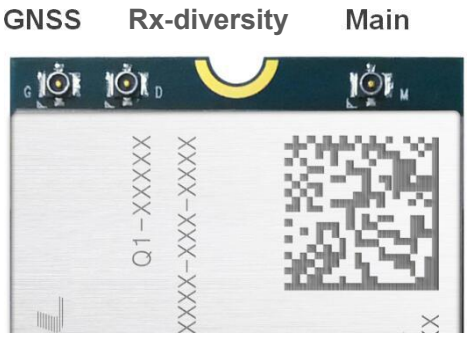

Figure 26: RF Antenna Connectors

5.1. Operating Frequency

Table 19: Module Operating Frequencies

3GPP Band	Transmit	Receive	Unit
B1	1920~1980	2110~2170	MHz
B3	1710~1785	1805~1880	MHz
B5	824~849	869~894	MHz
BC0	824~849	869~894	MHz
B7	2500~2570	2620~2690	MHz
B8	880~915	925~960	MHz
B20	832~862	791~821	MHz

B28	703~748	758~803	MHz
B38	2570~2620	2570~2620	MHz
B39	1880~1920	1880~1920	MHz
B40	2300~2400	2300~2400	MHz
B41	2555~2655	2555~2655	MHz

5.2. GNSS Frequency

The following tables show the frequency specification of GNSS antenna.

Table 20: GNSS Frequency

Type	Frequency	Unit
GPS	1575.42±1.023	MHz
GLONASS	1597.5~1605.8	MHz
Galileo	1575.42±2.046	MHz
BeiDou	1561.098±2.046	MHz
QZSS	1575.42	MHz

5.3. Antenna Installation

5.3.1. Antenna Requirements

The following table shows the requirements on main antenna, Rx-diversity antenna and GNSS antenna.

Table 21: Antenna Requirements

Type	Requirements
GNSS	Frequency range: 1559MHz~1609MHz Polarization: RHCP or linear VSWR: < 2 (Typ.)

	Passive antenna gain: > 0dBi
WCDMA/CDMA/LTE	VSWR: ≤ 2 Efficiency: > 30% Max input power: 50W Input impedance: 50Ω Cable insertion loss: < 1dB (WCDMA B8, CDMA BC0, LTE B5/B8/B20/B28) Cable insertion loss: < 1.5dB (WCDMA B1, LTE B1/B3/B39) Cable insertion loss < 2dB (LTE B7/B38/B40/B41)

5.3.2. Antenna Connectors and Mating Plugs

EM05 is mounted with RF connectors (receptacles) for convenient antenna connection. The dimensions of the antenna connectors are shown as below.

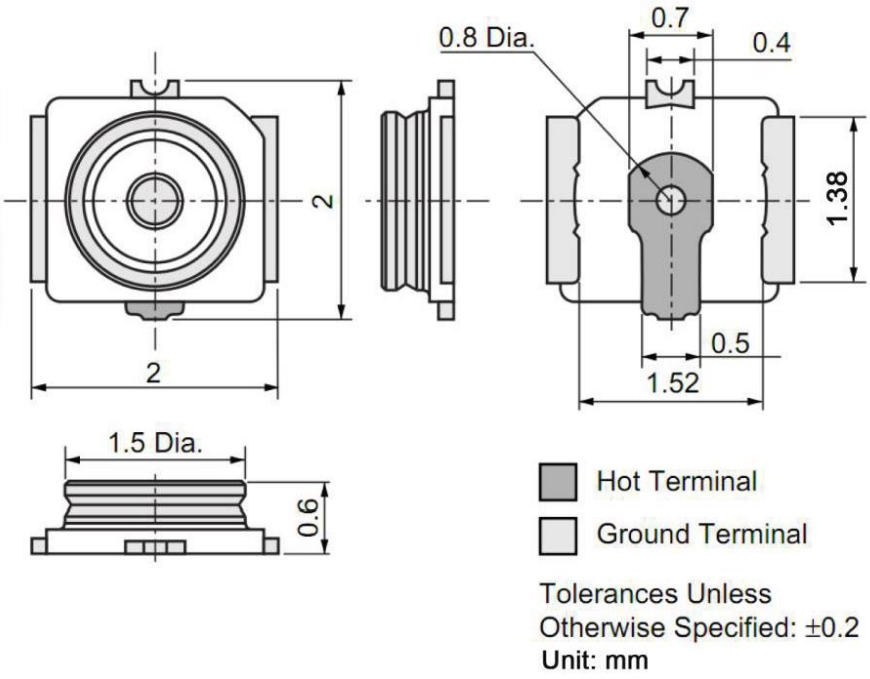

Figure 27: Dimensions of the Receptacles (Unit: mm)

Table 22: Major Specifications of Antenna Connectors

Item	Specification
Nominal Frequency Range	DC to 6 GHz
Nominal Impedance	50Ω
Temperature Rating	-40°C to +85°C
Voltage Standing Wave Ratio (VSWR)	Meet the requirements of: Max 1.3 (DC~3GHz) Max 1.45 (3GHz~6GHz)

The receptacle accepts two types of mating plugs to meet two maximum mated heights: 1.20mm (using a Ø0.81mm coaxial cable) and 1.45mm (using a Ø1.13mm coaxial cable).

The following figure shows the specifications of mating plugs using Ø0.81mm coaxial cables.

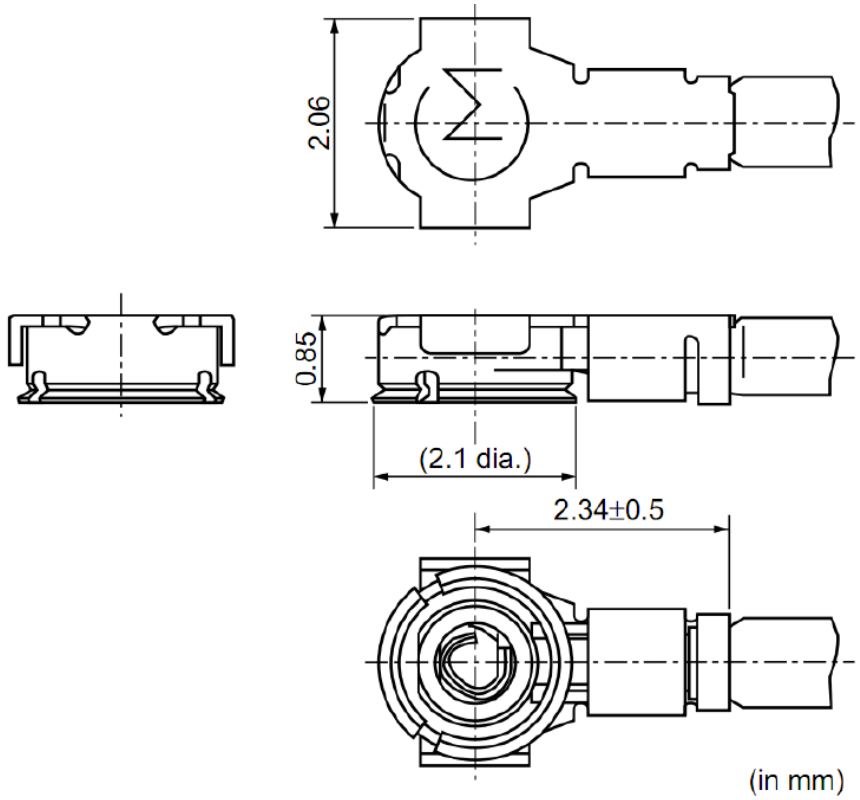

Figure 28: Specifications of Mating Plugs Using Ø0.81mm Coaxial Cables

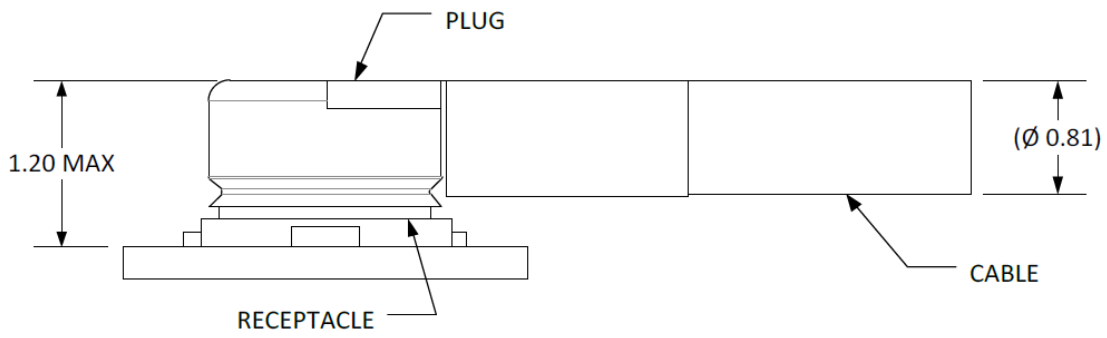

Figure 29: Connection between the RF Connector and the 0.81mm Coaxial Cable

The following figure illustrates the connection between the receptacle antenna connector on EM05 and the mating plug using a Ø1.13mm coaxial cable.

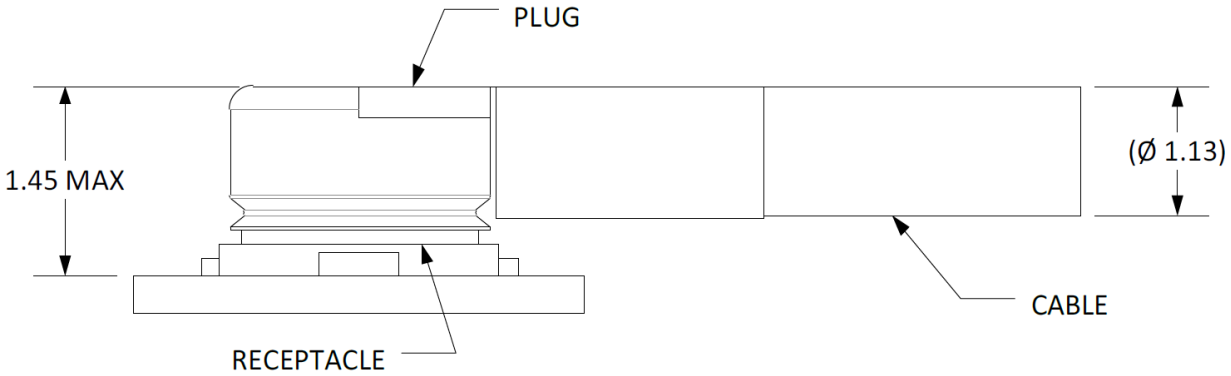

Figure 30: Connection between Receptacle and Mating Plug Using Ø1.13mm Coaxial Cable

6 Electrical, Reliability and Radio Characteristics

6.1. Absolute Maximum Ratings

Absolute maximum ratings for power supply and voltage on digital and analog pins of the module are listed in the following table.

Table 23: Absolute Maximum Ratings

Parameter	Min.	Max.	Unit
VCC	-0.3	4.7	V
Peak Current of VCC	0	1.0	A
Voltage at Digital Pins	-0.3	2.3	V

6.2. Power Supply Requirements

The input voltage of EM05 is 3.135V~4.4V, as specified by ***document [1]***. The following table shows the power supply requirements of EM05.

Table 24: Power Supply Requirements

Parameter	Description	Min.	Typ.	Max.	Unit
VCC	Power supply	3.135	3.3	4.4	V

6.3. I/O Requirements

Table 25: I/O Requirements

Parameter	Description	Min.	Max.	Unit
V_{IH}	Input high voltage	0.7 × V_{DD18}	V_{DD18}+0.3	V
V_{IL}	Input low voltage	-0.3	0.3 × V_{DD18}	V
V_{OH}	Output high voltage	V_{DD18}-0.5	V_{DD18}	V
V_{OL}	Output low voltage	0	0.4	V

NOTE

The maximum voltage value of V_{IL} for RESET# signal and W_DISABLE1# signal is 0.5V.

6.4. Operation and Storage Temperatures

Table 26: Operation and Storage Temperatures

Parameter	Min.	Typ.	Max.	Unit
Operation Temperature Range [1)]	-30	+25	+70	ºC
Extended Temperature Range [2)]	-40		+85	ºC
Storage Temperature Range	-40		+90	ºC

NOTES

1. [1)] Within operation temperature range, the module is 3GPP compliant.
2. [2)] Within extended temperature range, the module remains the ability to establish and maintain a voice, SMS, data transmission, etc. There is no unrecoverable malfunction. There are also no effects on radio spectrum and no harm to radio network. Only one or more parameters like P_{out} might reduce in their value and exceed the specified tolerances. When the temperature returns to the normal operating temperature levels, the module will meet 3GPP specifications again.

6.5. Current Consumption

The values of current consumption are shown below.

Table 27: Current Consumption of EM05-CE

Parameter	Description	Conditions	Typ.	Unit
I_{Vcc}	OFF state	Power down	5	μA
	Sleep state (USB connected)	**AT+CFUN=0**	2.3	mA
		WCDMA PF=64	3.3	mA
		WCDMA PF=128	3.0	mA
		WCDMA PF=256	2.8	mA
		LTE-FDD PF=64	3.9	mA
		LTE-FDD PF=128	3.3	mA
		LTE-TDD PF=256	3.0	mA
		LTE-TDD PF=64	3.9	mA
		LTE-TDD PF=128	3.3	mA
		LTE-TDD PF=128	2.9	mA
	Idle state	**AT+CFUN=0** (USB connected)	25.0	mA
		WCDMA PF=64 (USB connected)	28.0	mA
		WCDMA PF=64 (USB disconnected)	18.0	mA
		BC0 @ SCI=1 (USB connected)	31.0	mA
		LTE-FDD PF=64 (USB connected)	29.0	mA
		LTE-FDD PF=64 (USB disconnected)	19.0	mA
		LTE-TDD PF=64 (USB connected)	29.0	mA
		LTE-TDD PF=64 (USB disconnected)	19.0	mA

	CDMA data transfer (GNSS off)	BC0 Max Power @ 24.08dBm	577.0	mA
	WCDMA data transfer (GNSS off)	WCDMA B1 HSDPA @ 21.78dBm	570.0	mA
		WCDMA B1 HSUPA @ 21.64dBm	570.0	mA
		WCDMA B8 HSDPA @ 22.13dBm	530.0	mA
		WCDMA B8 HSUPA @ 22.19dBm	560.0	mA
	LTE data transfer (GNSS off)	LTE-FDD B1 @ 23.25dBm	750.0	mA
		LTE-FDD B3 @ 23.35dBm	740.0	mA
		LTE-FDD B5 @ 23.04dBm	640.0	mA
		LTE-FDD B8 @ 23.45dBm	640.0	mA
		LTE-TDD B38 @ 23.41dBm	400.0	mA
		LTE-TDD B39 @ 23.41dBm	295.0	mA
		LTE-TDD B40 @ 23.17dBm	430.0	mA
		LTE-TDD B41 @ 23.37dBm	390.0	mA
	WCDMA voice call	WCDMA B1 @ 22.89dBm	600.0	mA
		WCDMA B8 @ 22.82dBm	550.0	mA
	CDMA voice call	BC0 Max Power @ 23.93dBm	598.0	mA
		BC0 Min Power @ -60.07dBm	123.0	mA

Table 28: Current Consumption of EM05-CML

Parameter	Description	Conditions	Typ.	Unit
I_{Vcc}	OFF state	Power down	5	μA
	Sleep state (USB connected)	**AT+CFUN=0**	2.3	mA
		LTE-FDD PF=64	3.9	mA
		LTE-FDD PF=128	3.3	mA

		LTE-TDD PF=256	3.0	mA
		LTE-TDD PF=64	3.9	mA
		LTE-TDD PF=128	3.3	mA
		LTE-TDD PF=128	2.9	mA
	Idle state	**AT+CFUN=0** (USB connected)	25.0	mA
		LTE-FDD PF=64 (USB connected)	29.0	mA
		LTE-FDD PF=64 (USB disconnected)	19.0	mA
		LTE-TDD PF=64 (USB connected)	29.0	mA
		LTE-TDD PF=64 (USB disconnected)	19.0	mA
	LTE data transfer (GNSS off)	LTE-TDD B38 @ 23dBm	400.0	mA
		LTE-TDD B39 @ 23dBm	295.0	mA
		LTE-TDD B40 @ 23dBm	430.0	mA
		LTE-TDD B41 @ 23dBm	390.0	mA

Table 29: Current Consumption of EM05-E

Parameter	Description	Conditions	Typ.	Unit
I_{Vcc}	OFF state	Power down	20	μA
	Sleep state	**AT+CFUN=0**	1.1	mA
		WCDMA PF=64 (USB disconnected)	2.1	mA
		WCDMA PF=64 (USB suspend)	2.4	mA
		WCDMA PF=128 (USB disconnected)	1.6	mA
		WCDMA PF=256 (USB disconnected)	1.4	mA
		WCDMA PF=512 (USB disconnected)	1.3	mA
		LTE-FDD PF=32 (USB disconnected)	3.9	mA
		LTE-FDD PF=64 (USB disconnected)	2.5	mA

		LTE-FDD PF=64 (USB suspend)	2.7	mA
		LTE-FDD PF=128 (USB disconnected)	1.9	mA
		LTE-FDD PF=256 (USB disconnected)	1.5	mA
		LTE-TDD PF=32 (USB disconnected)	4.2	mA
		LTE-TDD PF=64 (USB disconnected)	2.6	mA
		LTE-TDD PF=64 (USB suspend)	2.9	mA
		LTE-TDD PF=128 (USB disconnected)	1.9	mA
		LTE-TDD PF=256 (USB disconnected)	1.5	mA
	Idle state	WCDMA PF=64 (USB disconnected)	21.0	mA
		WCDMA PF=64 (USB connected)	32.0	mA
		LTE-FDD PF=64 (USB disconnected)	20.0	mA
		LTE-FDD PF=64 (USB connected)	32.0	mA
		LTE-TDD PF=64 (USB disconnected)	22.0	mA
		LTE-TDD PF=64 (USB connected)	33.0	mA
	WCDMA data transfer (GNSS off)	WCDMA B1 HSDPA @ 21.88dBm	580.0	mA
		WCDMA B1 HSUPA @ 21.17dBm	576.0	mA
		WCDMA B8 HSDPA @ 22.10dBm	568.0	mA
		WCDMA B8 HSUPA @ 21.54dBm	567.0	mA
	LTE data transfer (GNSS off)	LTE-FDD B1 @ 22.65dBm	787.0	mA
		LTE-FDD B3 @ 22.65dBm	854.0	mA
		LTE-FDD B7 @ 22.93dBm	952.0	mA
		LTE-FDD B8 @ 22.42dBm	746.0	mA
		LTE-FDD B20 @ 22.17dBm	872.0	mA
		LTE-FDD B28 @ 22.23dBm	800.0	mA
		LTE-TDD B38 @ 22.72dBm	529.0	mA

		LTE-TDD B41 @ 22.72dBm	514.0	mA
	WCDMA voice call	WCDMA B1 @ 22.86dBm	634.0	mA
		WCDMA B8 @ 23.11dBm	613.0	mA

6.6. RF Output Power

The following table shows the RF output power of EM05 module.

Table 30: Conducted RF Output Power of EM05-CE

Frequency	Max.	Min.
LTE-FDD Bands	23dBm±2dB	< -39dBm
LTE-TDD Bands	23dBm±2dB	< -39dBm
CDMA Band	24dBm+2/-1dB	< -49dBm
WCDMA Bands	24dBm+1/-3dB	< -49dBm

Table 31: Conducted RF Output Power of EM05-CML

Frequency	Max.	Min.
LTE-TDD Bands	23dBm±2dB	< -39dBm

Table 32: Conducted RF Output Power of EM05-E

Frequency	Max.	Min.
LTE-FDD Bands	23dBm±2dB	< -39dBm
LTE-TDD Bands	23dBm±2dB	< -39dBm
WCDMA Bands	24dBm+1/-3dB	< -49dBm

6.7. RF Receiving Sensitivity

The following tables show conducted RF receiving sensitivity of EM05 series module.

Table 33: Conducted RF Receiving Sensitivity of EM05-CML

Frequency	Primary	Diversity	SIMO	3GPP (SIMO)
LTE-TDD B38 (10MHz)	-97.5dBm	-99.0dBm	-101.2dBm	-96.3dBm
LTE-TDD B39 (10MHz)	-99.0dBm	-100.2dBm	-102.5dBm	-96.3dBm
LTE-TDD B40 (10MHz)	-98.0dBm	-98.2dBm	-101.3dBm	-96.3dBm
LTE-TDD B41 (10MHz)	-97.5dBm	-99.0dBm	-101.0dBm	-94.3dBm

Table 34: Conducted RF Receiving Sensitivity of EM05-CE

Frequency	Primary	Diversity	SIMO	3GPP (SIMO)
LTE-TDD B38 (10MHz)	-97.5dBm	-99.0dBm	-101.2dBm	-96.3dBm
LTE-TDD B39 (10MHz)	-99.0dBm	-100.2dBm	-102.5dBm	-96.3dBm
LTE-TDD B40 (10MHz)	-98.0dBm	-98.2dBm	-101.3dBm	-96.3dBm
LTE-TDD B41 (10MHz)	-97.5dBm	-99.0dBm	-101.0dBm	-94.3dBm
LTE-FDD B1 (10MHz)	-98.5dBm	-99.0dBm	-101.7dBm	-96.3dBm
LTE-FDD B3 (10MHz)	-98.5dBm	-99.5dBm	-102.2dBm	-93.3dBm
LTE-FDD B5 (10MHz)	-98.7dBm	-100.2dBm	-102.7dBm	-94.3dBm
LTE-FDD B8 (10MHz)	-98.5dBm	-100.0dBm	-102.5dBm	-93.3dBm
WCDMA B1	-109.5dBm	\	\	-106.7dBm
WCDMA B8	-110.0dBm	\	\	-103.7dBm
CDMA BC0	-109.0dBm	\	\	-104.0dBm

Table 35: Conducted RF Receiving Sensitivity of EM05-E

Frequency	Primary	Diversity	SIMO	3GPP (SIMO)
LTE-TDD B38 (10MHz)	-98.2dBm	-97.9dBm	-101.2dBm	-96.3dBm
LTE-TDD B41 (10MHz)	-98.2dBm	-97.4dBm	-101.0dBm	-94.3dBm
LTE-FDD B1 (10MHz)	-97.7dBm	-98.8dBm	-101.7dBm	-96.3dBm
LTE-FDD B3 (10MHz)	-97.7dBm	-99.1dBm	-102.2dBm	-93.3dBm
LTE-FDD B7 (10MHz)	-95.7dBm	-97.8dBm	-100.7dBm	-94.3dBm
LTE-FDD B8 (10MHz)	-98.4dBm	-99.8dBm	-102.3dBm	-93.3dBm
LTE-FDD B20 (10MHz)	-98.0dBm	-99.8dBm	-102.2dBm	-93.3dBm
LTE-FDD B28 (10MHz)	-98.1dBm	-99.6dBm	-102.4dBm	-94.8dBm
WCDMA B1	-109.5dBm	\	\	-106.7dBm
WCDMA B8	-110.0dBm	\	\	-103.7dBm

6.8. Electrostatics Discharge

The following table shows the ESD characteristics of EM05.

Table 36: ESD Characteristics of EM05

Tested Interfaces	Contact Discharge	Air Discharge	Unit
Power Supply and GND	+/-4	+/-10	kV
Antenna Interface	+/-4	+/-8	kV
Others	+/-0.5	+/-1	kV

NOTE

For a good ESD performance, the module mounting holes must be used to attach the device to the main PCB ground closely.

6.9. Thermal Consideration

EM05 is designed to work over an extended temperature range. In order to achieve a maximum performance while working under extended temperatures or extreme conditions (such as with maximum power or data rate, etc.) for a long time, it is strongly recommended to add a heat sink (a thermal compound or pad must be used between the module and the metal heat sink) between the module and the main PCB for thermal dissipation.

Please add ground vias as many as possible on PCB for better heat dissipation. It is NOT recommended to apply solder mask on the main PCB below the thermal dissipation area of EM05, and the module should be kept away from heating sources.

The thermal dissipation area is shown as below. The dimensions are measured in mm.

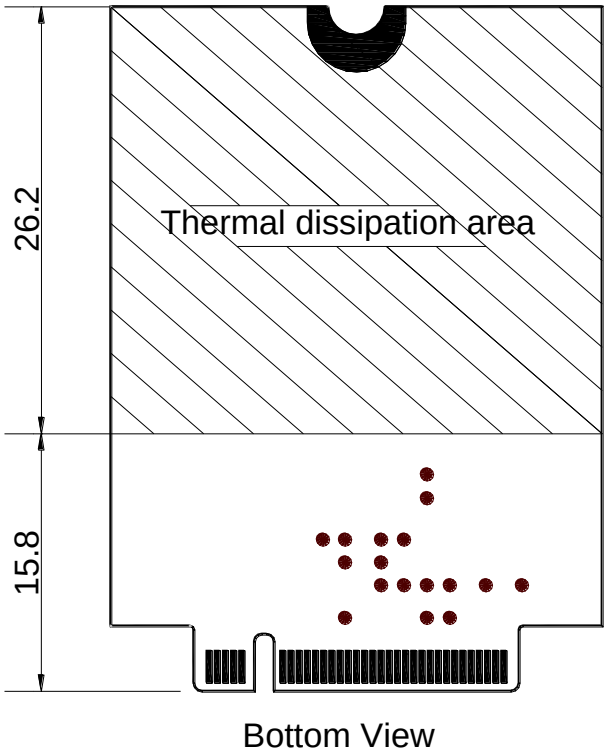

Figure 31: Thermal Dissipation Area on Bottom Side of the Module

The table below shows the heat dissipation performance after adding a heat sink between the module and the main PCB.

Table 37: Heat Dissipation Performance

Scenario	Testing Time	Temperature		
		Baseband	PA	Unit
No heat sink	15 minutes	112	112	°C
Add a heat sink	15 minutes	90	89	°C

NOTE

The test conditions: LTE Band 8, BW=1.4M and with max transmitting power in ambient temperature 70°C.

7 Mechanical Dimensions and Packaging

This chapter mainly describes mechanical dimensions and packaging specifications of EM05 module. All dimensions are measured in millimeter (mm), and the dimensional tolerances are ±0.05mm unless otherwise specified.

7.1. Mechanical Dimensions of the Module

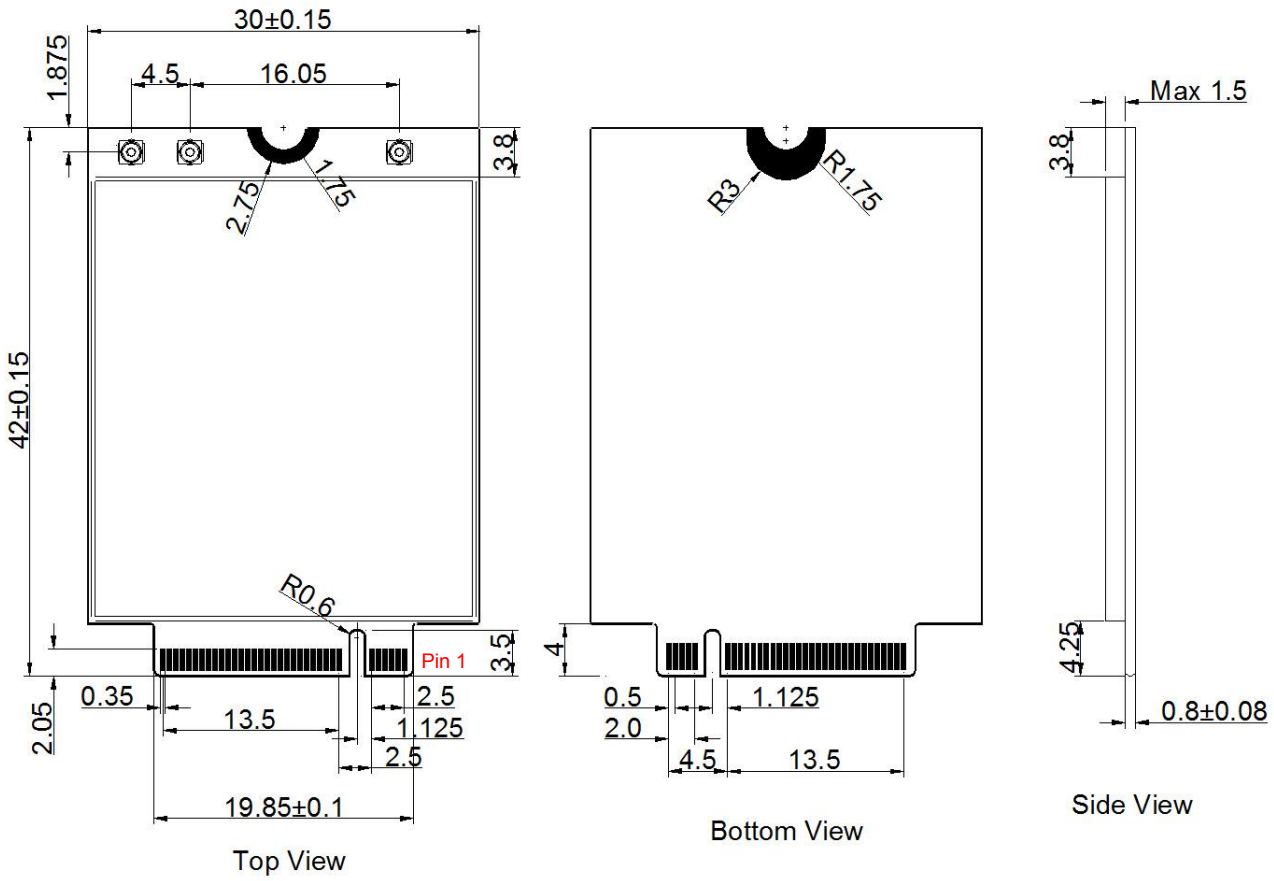

Figure 32: Mechanical Dimensions of EM05

7.2. Standard Dimensions of M.2 PCI Express

The following figure shows the standard dimensions of M.2 PCI Express. Please refer to ***document [1]*** for details.

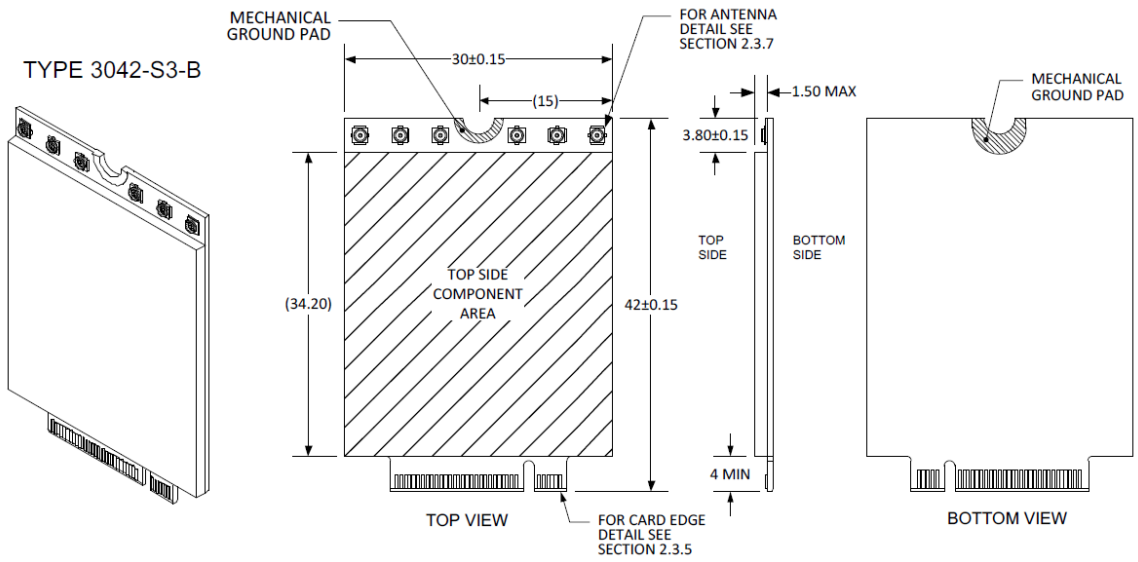

Figure 33: Standard Dimensions of M.2 Type 3042-S3

According to M.2 nomenclature, EM05 is Type 3042-S3-B (30.0mm × 42.0mm, max component height on the top is 1.5mm and single-sided, key ID is B).

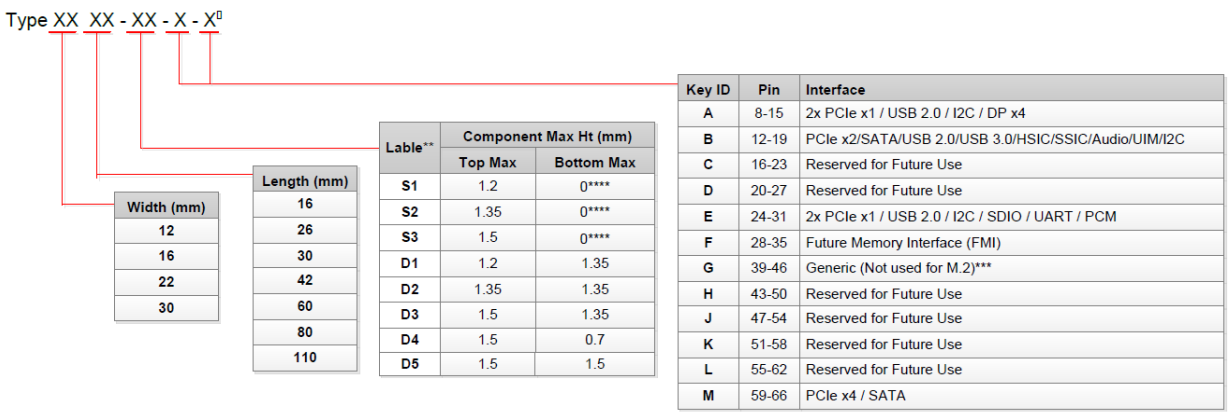

Width (mm)
12
16
22
30

Length (mm)
16
26
30
42
60
80
110

Lable**	Component Max Ht (mm)	
	Top Max	Bottom Max
S1	1.2	0****
S2	1.35	0****
S3	1.5	0****
D1	1.2	1.35
D2	1.35	1.35
D3	1.5	1.35
D4	1.5	0.7
D5	1.5	1.5

Key ID	Pin	Interface
A	8-15	2x PCIe x1 / USB 2.0 / I2C / DP x4
B	12-19	PCIe x2/SATA/USB 2.0/USB 3.0/HSIC/SSIC/Audio/UIM/I2C
C	16-23	Reserved for Future Use
D	20-27	Reserved for Future Use
E	24-31	2x PCIe x1 / USB 2.0 / I2C / SDIO / UART / PCM
F	28-35	Future Memory Interface (FMI)
G	39-46	Generic (Not used for M.2)***
H	43-50	Reserved for Future Use
J	47-54	Reserved for Future Use
K	51-58	Reserved for Future Use
L	55-62	Reserved for Future Use
M	59-66	PCIe x4 / SATA

* Use ONLY when a double slot is being specified
** Label included in height dimension
*** Key G is intended for custom use. Devices with this key will not be M.2-compliant. Use at your own risk!
**** Insulating label allowed on connector-based designs

Figure 34: M.2 Nomenclature

7.3. Design Effect Drawings of the Module

Figure 35: Top View of the Module

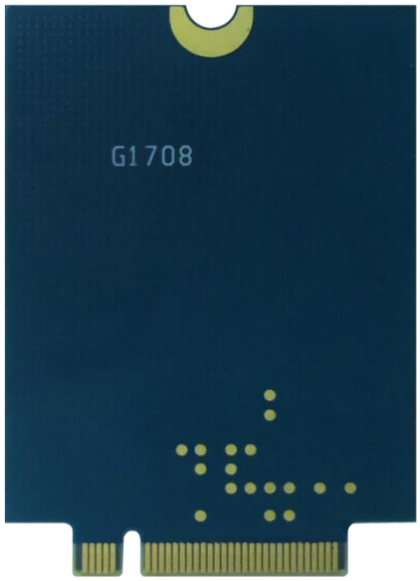

Figure 36: Bottom View of the Module

NOTE

These are design effect drawings of EM05 module. For more accurate pictures, please refer to the module that you get from Quectel.

7.4. M.2 Connector

EM05 adopts a standard PCI Express M.2 connector which compiles with the directives and standards listed in ***document [1]***.

7.5. Packaging

EM05 is packaged in tray. Each tray contains 10 modules, and the smallest package contains 100pcs of modules.

8 Appendix References

Table 38: Related Documents

SN	Document Name	Remark
[1]	PCI Express M.2 Specification	PCI Express Specification
[2]	Quectel_LTE_Standard_AT_Commands_Manual	AT Commands Manual for LTE Standard Modules
[3]	Quectel_LTE_Standard_GNSS_Application_Note	GNSS Application Note for LTE Standard Modules

Table 39: Terms and Abbreviations

Abbreviation	Description
bps	Bits Per Second
CDMA	Code Division Multiple Access
DFOTA	Delta Firmware Upgrade Over-The-Air
DL	Downlink
ESD	Electrostatic Discharge
FDD	Frequency Division Duplexing
GLONASS	GLObalnaya Navigatsionnaya Sputnikovaya Sistema, the Russian Global Navigation Satellite System
GNSS	Global Navigation Satellite System
GPS	Global Positioning System
GSM	Global System for Mobile Communications
HR	Half Rate
HSDPA	High Speed Downlink Packet Access

HSPA	High Speed Packet Access
HSUPA	High Speed Uplink Packet Access
kbps	Kilo Bits Per Second
LED	Light Emitting Diode
LTE	Long Term Evolution
Mbps	Million Bits Per Second
ME	Mobile Equipment (Module)
MIMO	Multiple-Input Multiple-Output
MLCC	Multiplayer Ceramic Chip Capacitor
MMS	Multimedia Messaging Service
MO	Mobile Originated
MT	Mobile Terminated
PDU	Protocol Data Unit
PPP	Point-to-Point Protocol
RF	Radio Frequency
Rx	Receive
SAR	Specific Absorption Rate
SMS	Short Message Service
Tx	Transmit
UART	Universal Asynchronous Receiver & Transmitter
UL	Uplink
URC	Unsolicited Result Code
(U)SIM	(Universal) Subscriber Identification Module
WCDMA	Wideband Code Division Multiple Access