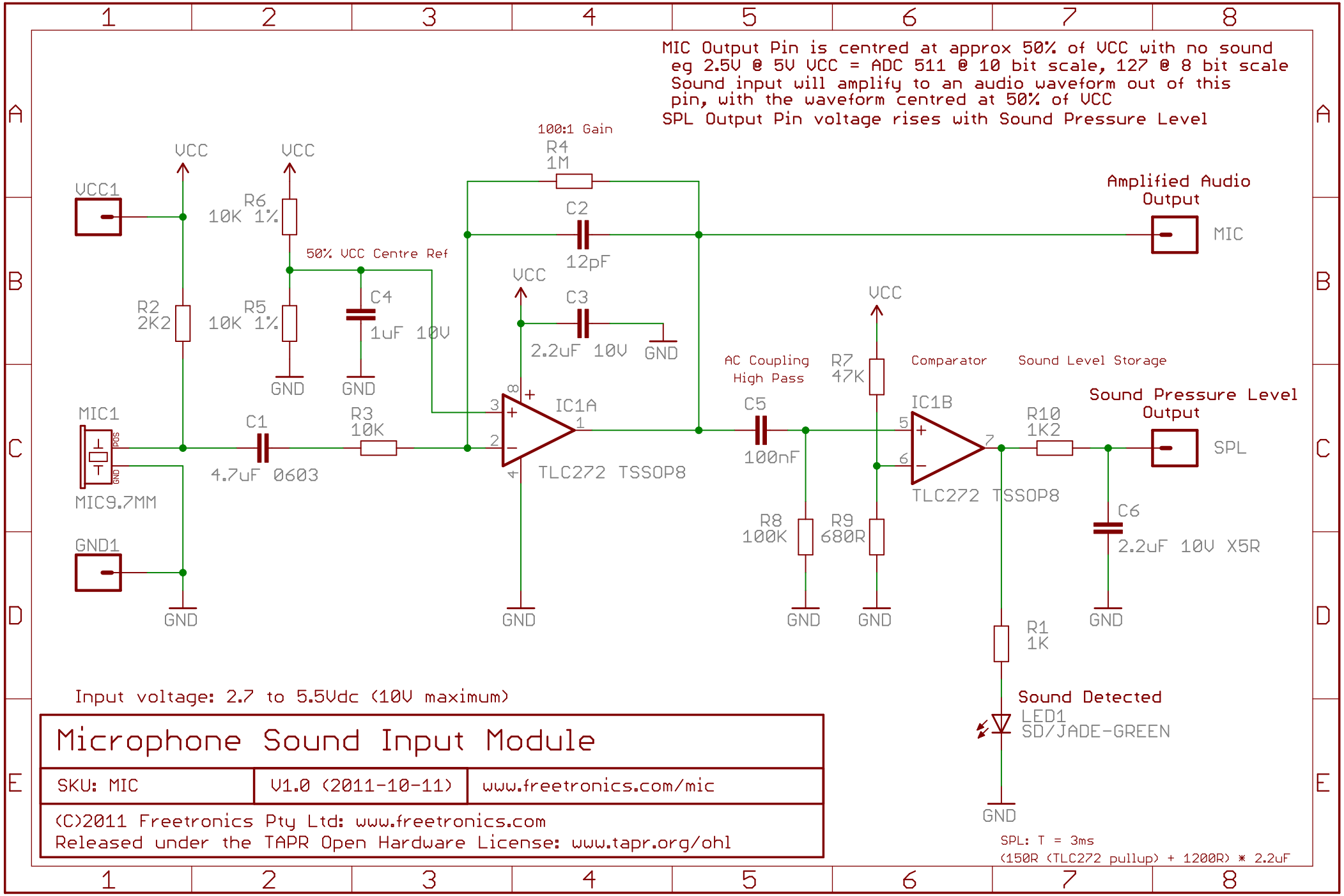
MIC Output Pin is centred at approx 50% of VCC with no sound
eg 2.5V @ 5V VCC = ADC 511 @ 10 bit scale, 127 @ 8 bit scale
Sound input will amplify to an audio waveform out of this
pin, with the waveform centred at 50% of VCC
SPL Output Pin voltage rises with Sound Pressure Level
100:1 Gain
R4
1M
C2
12pF
Amplified Audio
Output
MIC
VCC
VCC1
R6
10K 1%
50% VCC Centre Ref
R2
2K2
R5
10K 1%
C4
1uF 10V
GND
GND
VCC
C3
2.2uF 10V
GND
MIC1
MIC9.7MM
C1
4.7uF 0603
R3
10K
IC1A
TLC272 TSSOP8
GND1
GND
GND
AC Coupling
High Pass
R7
47K
Comparator
Sound Level Storage
C5
100nF
IC1B
TLC272 TSSOP8
R10
1K2
Sound Pressure Level
Output
SPL
R8
100K
R9
680R
C6
2.2uF 10V X5R
GND
GND
GND
R1
1K
Sound Detected
LED1
SD/JADE-GREEN
GND
Input voltage: 2.7 to 5.5Vdc (10V maximum)
Microphone Sound Input Module
SKU: MIC
V1.0 (2011-10-11)
www.freetronics.com/mic
(C)2011 Freetronics Pty Ltd: www.freetronics.com
Released under the TAPR Open Hardware License: www.tapr.org/ohl
SPL: T = 3ms
(150R (TLC272 pullup) + 1200R) * 2.2uF