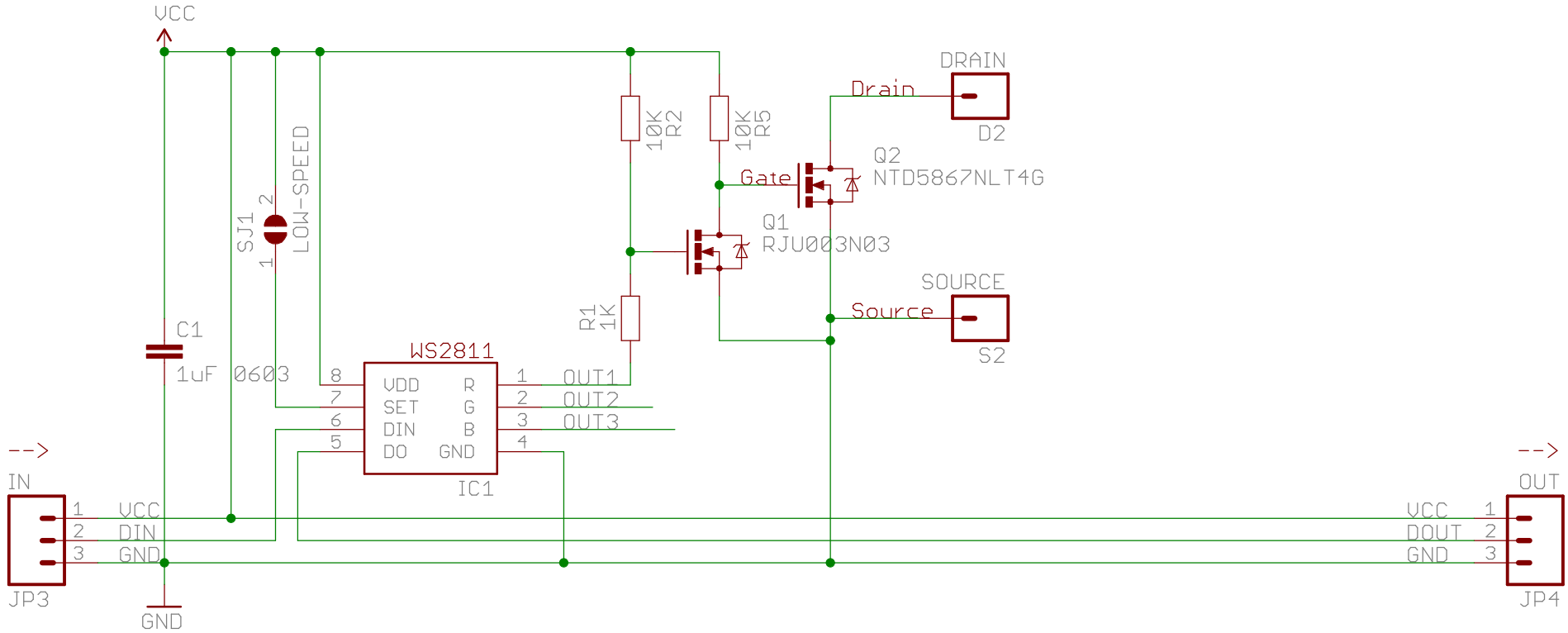

FreeNFET Module

SKU: FreeNFET	V1.0 (2016-01-19)	www.freetronics.com.au/freenfet

(C)2016 Freetronics Pty Ltd: www.freetronics.com.au
Released under the TAPR Open Hardware License: www.tapr.org/ohl

SET FLOATING: high speed 800kHz mode (default)
SET HIGH: low speed 400kHz mode (optional)
Max drain to source voltage: 60V
Max drain to source current: 18A
Drain to source on resistance: 39 milliohms