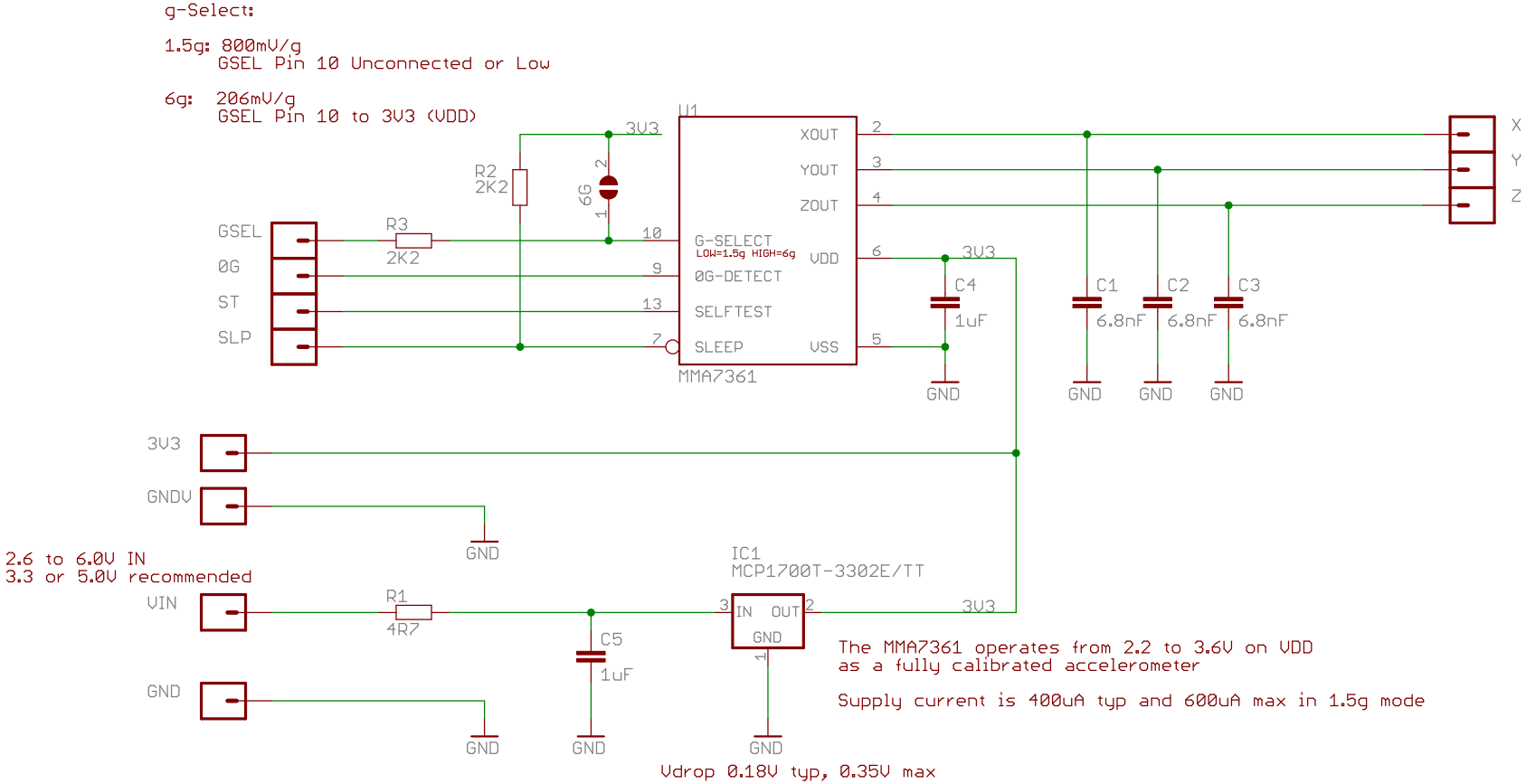

Freetronics Accelerometer Module 3 Axis

www.freetronics.com/am3x | M-AM3X | V1.0 (2011-07-28)